PARTS LIST

トーハツ船外機
パーツ　リスト

TOHATSU

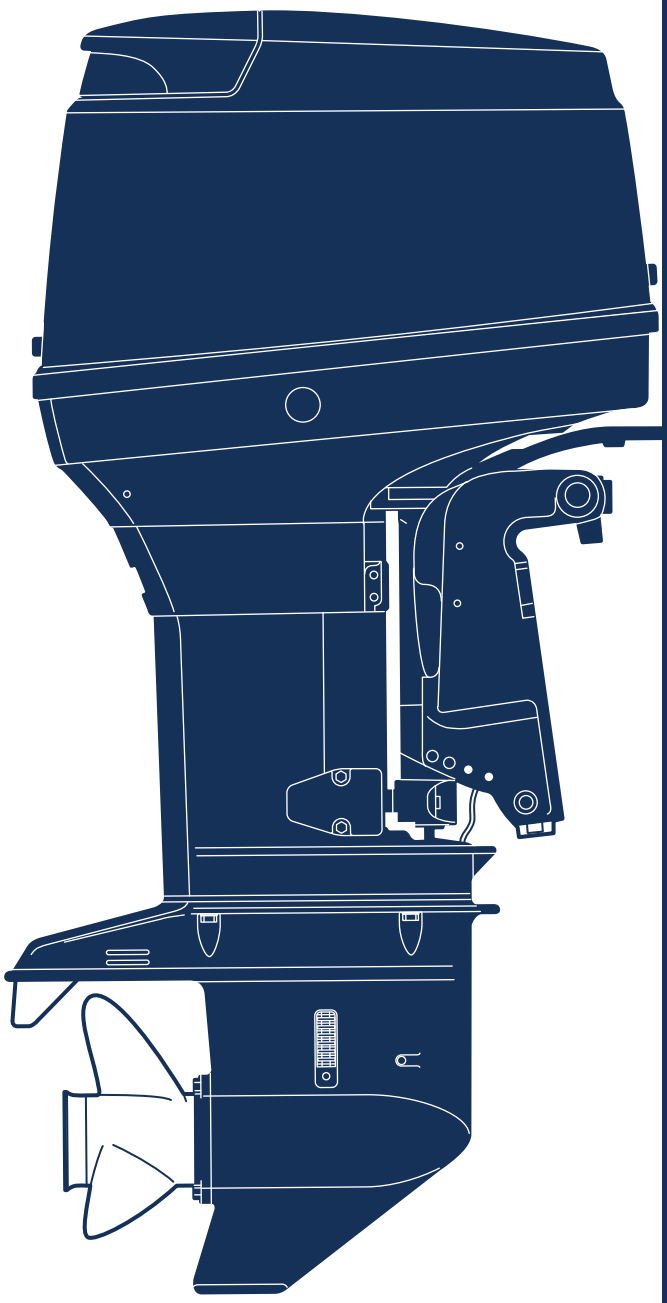

MD 40
50
70
90

OB NO.002-21049-3
0608 NICS 2000

パーツカタログのご使用について

1. このパーツリストは、トーハツ船外機を構成している部品を収録したものです。

2. 部品新設、廃止または、変更が生じた場合は、インフォメーション等にてお知らせ致しますので、その都度、ご訂正ください。

3. アッセンブリまたは、キットでの販売部品は、その構成する部品の頭に（＊）印をつけて表します。

4. 本文中に記載されている記号は次の様になっています。

STD	:スタンダード	M	:マニュアルチルト
OPT	:オプション	F	:ティラハンドルタイプ
O/S	:オーバーサイズ	P	:プレジャータイプ
Ass'y	:アッセンブリ	PTT	:パワートリム＆チルト
AR	:必要に応じて選択		

5. オーダー上の注意
   塗装部品の注文に当たっては、以下に従ってください。
   パーツナンバーの4桁目が“B”・“Q”・“S”・“W”記号のものは塗装されています。
   現在の塗装色はパワーヘッドがブラック(B)、ロワユニットがアクアマリンブルー（Q)、プロペラがホワイト(W)です。
   ※ロワユニットの旧塗装色は(S)シルバーグレーです。

例示-1：パワーヘッド部品

3T5B01100-0

↓

B：ブラック

例示-2：ロワユニット部品

3C8Q61191-1

↓

Q：アクアマリンブルー

6. 備考欄にオールドパーツNo.が記されている部品は、パーツNo.が変更された部品ですが、部品に変更はありません。

7. 備考欄に“UNIQUE”もしくは“N.A.F.N”と記されている部品がありますが、特に関係ありません。

HOW TO USE THIS PARTS LIST

1. This Parts List contains the component parts of the Tohatsu outboard motors.

2. Please keep the Parts List updated each time when receiving the Service Bulletin describing the addition, abolition and/or change of parts.

3. Given mark in (*) to part number shows assembly or kit part.

4. Marks in this Parts List show.

STD	: Standard	M	: Manual Tilt Type
OPT	: Optional Parts	F	: Tiller Handle Type
O/S	: Over Size	P	: Pleasure Type
Ass'y	: Assembly	PTT	: Power Trim & Tilt Type
AR	: As required		

5. Attention to order
   Please order painted parts in accordance with following. The parts that fourth figure of the parts number is "B", "Q", "S" or "W" have painted.

[Example]

POWER HEAD PARTS
3 T 5 B 0 1 1 0 0 - 0
↓
B : Black

LOWER UNIT PARTS
3 C 8 Q 6 1 1 9 1 - 1
↓
Q : Aquamarine Blue
(present color)

PROPELLER
3 T 5 W 6 4 5 2 7 - 0
↓
W : White

3 C 8 S 6 1 1 9 1 - 1
↓
S : Silver gray
(old color)

6. Old part numbers written in the Remarks column mean that only part numbers were changed.

7. You don't care that the "UNIQUE" or "N.A.F.N" parts written in the Remarks column.

目　　次
CONTENTS

Fig. 1	ｼﾘﾝﾀﾞｰ・ｸﾗﾝｸｹｰｽ CYLINDER・CRANK CASE	1
Fig. 2	ﾋﾟｽﾄﾝ・ｸﾗﾝｸｼｬﾌﾄ PISTON・CRANK SHAFT	5
Fig. 3	ｴｱﾁｬﾝﾊﾞ（ｴｱﾎﾞｯｸｽ） AIR CHAMBER (AIR BOX)	7
Fig. 4	ｴｱﾚｰﾙ AIR RAIL	9
Fig. 5	FFPｱｯｼ FFP ASS'Y	13
Fig. 6	ﾍﾞｰﾊﾟｾﾊﾟﾚｰﾀ & ﾌｭｴﾙﾗｲﾝ VAPOR SEPARATOR & FUEL LINE	15
Fig. 7	ｽﾛｯﾄﾙ THROTTLE	19
Fig. 8	ﾃｨﾗﾊﾝﾄﾞﾙ（F ﾀｲﾌﾟ） TILLER HANDLE (F Type)	23
Fig. 9	ｽｲｯﾁﾎﾞｯｸｽ（F ﾀｲﾌﾟ） SWITCH BOX (F Type)	27
Fig. 10	ﾏｸﾞﾈﾄ MAGNETO	29
Fig. 11	ｴﾚｸﾄﾘｯｸﾊﾟｰﾂ（ ECU & ﾀﾞｲﾔｸﾞﾗﾑ ） ELECTRIC PARTS (ECU & DIAGRAM)	31
Fig. 12	ｴﾚｸﾄﾘｯｸﾊﾟｰﾂ（ ｽﾀｰﾀﾓｰﾀ ） ELECTRIC PARTS (STARTER MOTOR)	35
Fig. 13	ｴｱｺﾝﾌﾟﾚｯｻ AIR COMPRESSOR	39
Fig. 14	ｵｲﾙﾎﾟﾝﾌﾟ OIL PUMP	43
Fig. 15	ﾄﾞﾗｲﾌﾞｼｬﾌﾄﾊｳｼﾝｸﾞ DRIVE SHAFT HOUSING	47
Fig. 16	ｷﾞﾔｹｰｽ（ﾄﾞﾗｲﾌﾞｼｬﾌﾄ ） GEAR CASE (DRIVE SHAFT)	51
Fig. 17	ｷﾞﾔｹｰｽ（ ﾌﾟﾛﾍﾟﾗｼｬﾌﾄ ） GEAR CASE (PROPELLER SHAFT)	55
Fig. 18	ｼﾌﾄ SHIFT	59
Fig. 19	ﾌﾞﾗｹｯﾄ (1) ﾏﾆｭｱﾙﾁﾙﾄ BRACKET (1) MANUAL TILT	63
Fig. 20	ﾌﾞﾗｹｯﾄ (2) ﾊﾟﾜｰﾄﾘﾑ & ﾁﾙﾄ（新） BRACKET (2) POWER TRIM & TILT (New)	67

Fig. 21 マニュアルチルト (M タイプ)
MANUAL TILT (M Type) 73

Fig. 22 パワートリム & チルト (新)
POWER TRIM & TILT (New) 75

Fig. 23 ボトムカウル (モーターカバーロワ)
BOTTOM COWL (MOTOR COVER LOWER) 77

Fig. 24 トップカウル (モーターカバーアッパ)
TOP COWL (MOTOR COVER UPPER) 81

Fig. 25 セパレートフュエルタンク
SEPARATE FUEL TANK 83

Fig. 26 アクセサリー
ACCESSORIES 85

Fig. 27 オプショナルパーツ (1)
OPTIONAL PARTS (1) 89

Fig. 28 オプショナルパーツ (2) (P タイプ)
OPTIONAL PARTS (2) (P Type) 93

Fig. 29 オプショナルパーツ (3) (P タイプ)
OPTIONAL PARTS (3) (P Type) 95

Fig. 30 オプショナルパーツ (4)
OPTIONAL PARTS (4) 97

Fig. 31 アッセンブリ・キット
ASSEMBLY・KIT 99

WD50B

Fig. 1 ギヤケース (ドライブシャフト)
GEAR CASE (DRIVE SHAFT) 1

Fig. 2 ギヤケース (プロペラシャフト)
GEAR CASE (PROPELLER SHAFT) 5

Fig. 3 ドライブシャフトハウシング
DRIVE SHAFT HOUSING 9

シリンダ・クランクケース
Fig.1 CYLINDER・CRANK CASE

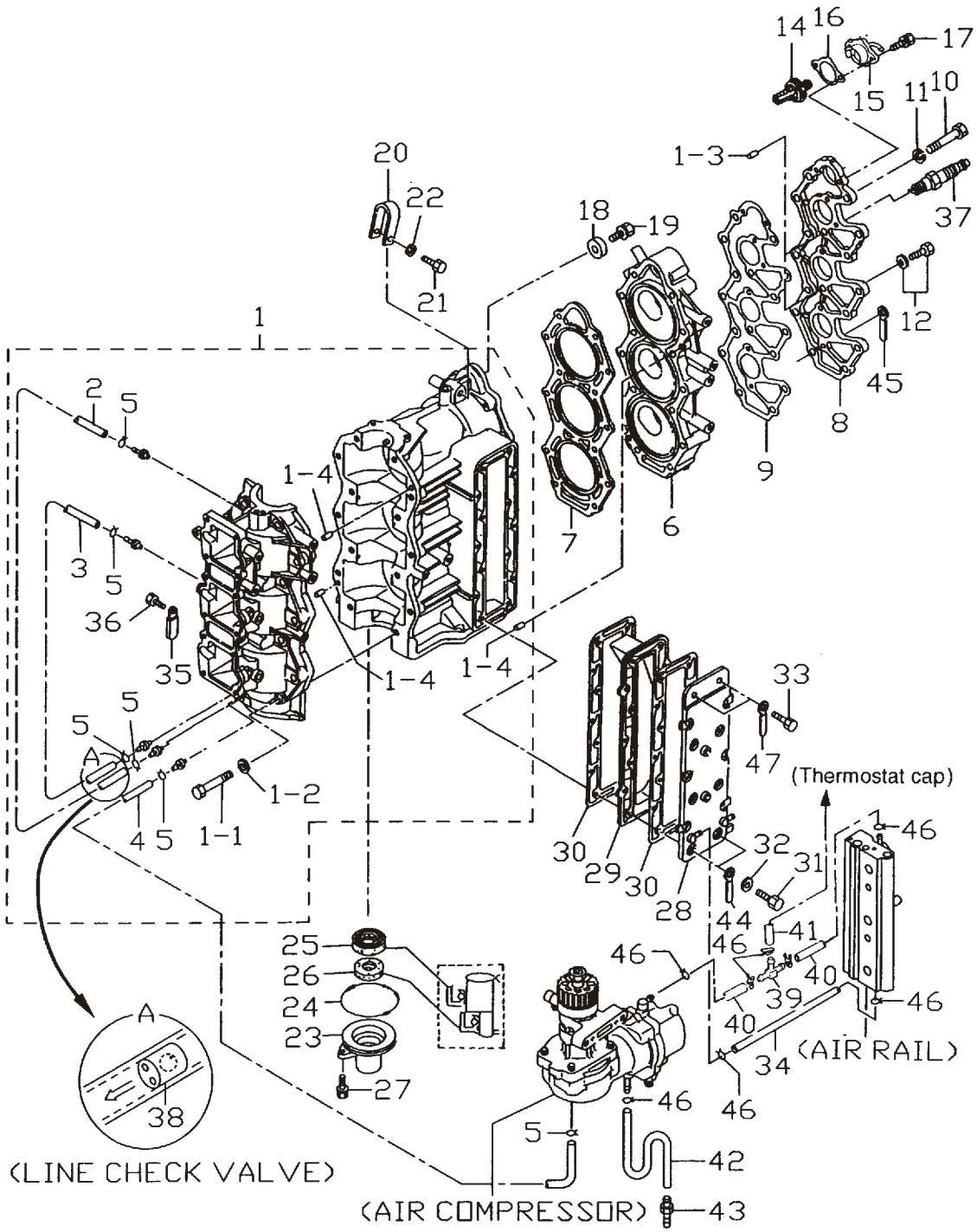

見出番号 Ref. No.	部品番号 Part No.	部　品　名 Description	個数 Q'ty D 50 B	個数 Q'ty D 40 B	備　考 Remarks
1-1	3T5B01100-0	ｼﾘﾝﾀﾞ・ｸﾗﾝｸｹｰｽ Cylinder-Crank Case	1	1	
1-1-1	916124-0845	ﾎﾞﾙﾄ ＊ Bolt	14	14	
1-1-2	940121-0800	ﾜｯｼｬ ＊ Washer	14	14	
1-1-3	334-65012-0	ﾀﾞｳｴﾙﾋﾟﾝ、4-10 ＊ Dowel Pin, 4-10	2	2	
1-1-4	345-01111-0	ﾀﾞｳｴﾙﾋﾟﾝ、6-12 ＊ Dowel Pin, 6-12	4	4	
1-2	98AL-4-0355	ｺﾞﾑﾎｰｽ Rubber Hose	1	1	
1-3	98AL-4-0205	ｺﾞﾑﾎｰｽ Rubber Hose	1	1	
1-4	98AL-4-0335	ｺﾞﾑﾎｰｽ Rubber Hose	1	1	
1-5	338-01133-0	ｸﾘｯﾌﾟ、φ7 Clip, φ7	6	6	
1-6	3Z5B01091-0	ｼﾘﾝﾀﾞﾍｯﾄﾞ Cylinder Head	1	1	# 011601XC～
	3T5B01001-0	ｼﾘﾝﾀﾞﾍｯﾄﾞ Cylinder Head	(1)	(1)	～ # 006249XC
1-7	3T5-01005-0	ｼﾘﾝﾀﾞﾍｯﾄﾞｶﾞｽｹｯﾄ Cylinder Head Gasket	1	1	
1-8	3T5B01021-0	ｼﾘﾝﾀﾞﾍｯﾄﾞｶﾊﾞｰ Cylinder Head Cover	1	1	
1-9	3T5-01024-0	ｼﾘﾝﾀﾞﾍｯﾄﾞｶﾊﾞｰｶﾞｽｹｯﾄ Cylinder Head Cover Gasket	1	1	
1-10	916189-0865	ﾎﾞﾙﾄ Bolt	14	14	
1-11	345-01015-0	ﾜｯｼｬ、8.5-19.5-3.2 Washer, 8.5-19.5-3.2	14	14	
1-12	910121-5620	ﾎﾞﾙﾄ Bolt	4	4	or 910113-5620
1-14	345-01030-0	ｻｰﾓｽﾀｯﾄ Thermostat	1	1	
1-15	3T5B01031-1	ｻｰﾓｽﾀｯﾄｷｬｯﾌﾟ Thermostat Cap	1	1	50A # 11273～ 40A # 40001～
1-16	3T5-01032-0	ｻｰﾓｽﾀｯﾄｷｬｯﾌﾟｶﾞｽｹｯﾄ Thermostat Cap Gasket	1	1	
1-17	910113-5625	ﾎﾞﾙﾄ Bolt	2	2	
1-18	338-60218-2	ｱﾉｰﾄﾞ Anode	1	1	
1-19	910103-5620	ﾎﾞﾙﾄ Bolt	1	1	or 910113-5620
1-20	3C8B01513-0	ﾊﾝｶﾞ Hanger	1	1	
1-21	910114-0835	ﾎﾞﾙﾄ Bolt	1	1	
1-22	940121-0800	ﾜｯｼｬ Washer	1	1	
1-23	3C8-01291-0	ｸﾗﾝｸｹｰｽﾍｯﾄﾞ Crank Case Head	1	1	
1-24	346-01216-0	O ﾘﾝｸﾞ、1.7-59 O-Ring, 1.7-59	1	1	
1-25	3T5-00122-0	ｵｲﾙｼｰﾙ、25-40-8 Oil Seal, 25-40-8	1	1	
1-26	3C8-01215-0	ｵｲﾙｼｰﾙ、16-28-7 Oil Seal, 16-28-7	1	1	

シリンダ・クランクケース
Fig.1 CYLINDER・CRANK CASE

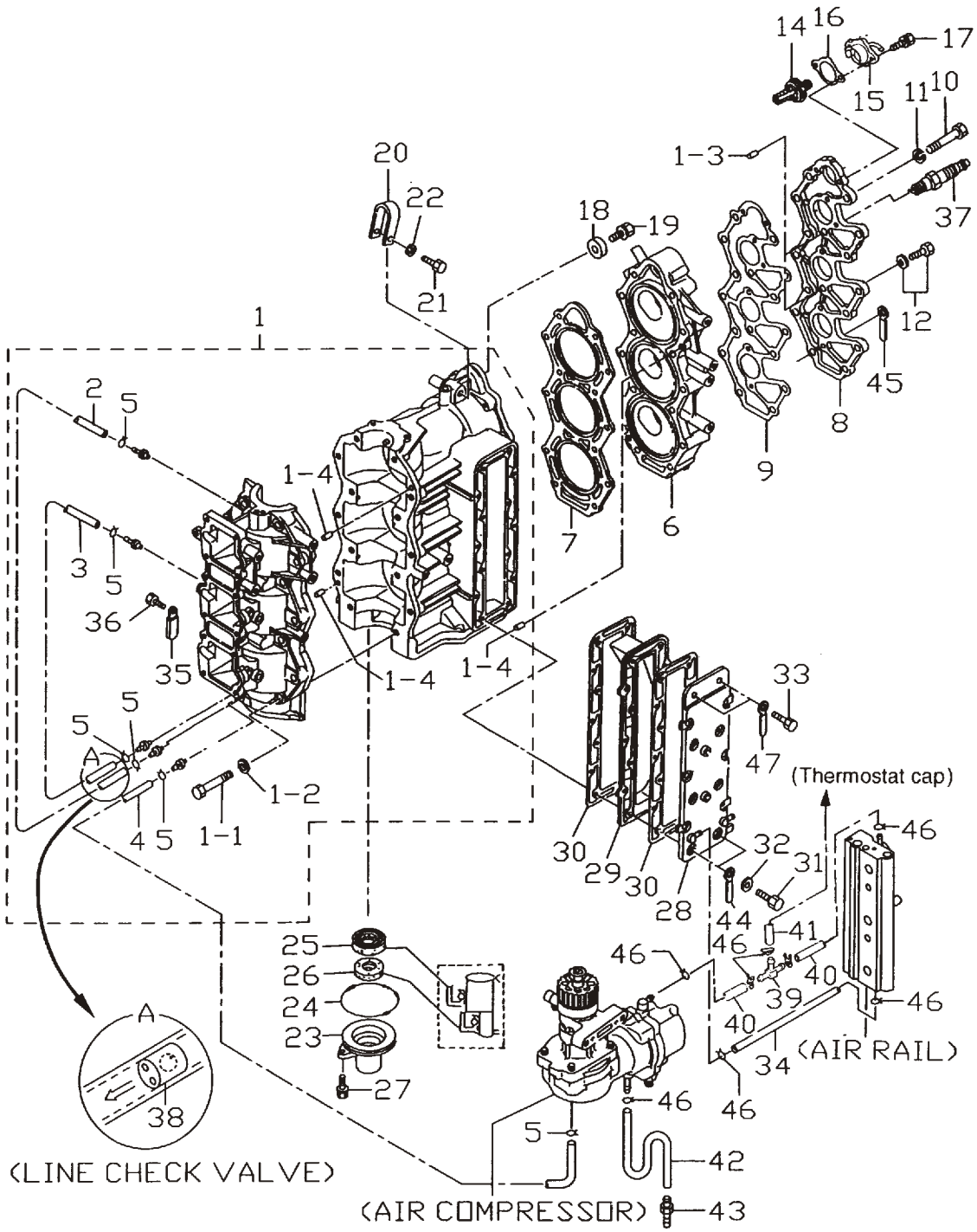

見出番号 Ref. No.	部品番号 Part No.	部　品　名 Description	個数 Q'ty D 50 B	D 40 B	備　考 Remarks
1-27	910113-5620	ﾎﾞﾙﾄ Bolt	2	2	
1-28	3T5B02301-0	ｴｷｿﾞｰｽﾄｶﾊﾞｰ (ｱｳﾀ) Exhaust Cover (Outer)	1	1	
1-29	3C8-02302-0	ｴｷｿﾞｰｽﾄｶﾊﾞｰ (ｲﾝﾅ) Exhaust Cover (Inner)	1	1	
1-30	3C8-02305-1	ｴｷｿﾞｰｽﾄｶﾊﾞｰｶﾞｽｹｯﾄ Exhaust Cover Gasket	2	2	
1-31	916114-0630	ﾎﾞﾙﾄ Bolt	12	12	
1-32	940113-0600	ﾜｯｼｬ Washer	14	14	or 940121-0600
1-33	916114-0630	ﾎﾞﾙﾄ Bolt	2	2	
1-34	98AB-5-0250	ｺﾞﾑﾎｰｽ Rubber Hose	1	1	
1-35	309-06972-0	ｸﾗﾝﾌﾟ、6.5-47.5P Clamp, 6.5-47.5P	2	2	P ﾀｲﾌﾟ for “P” Type
1-36	910113-0610	ﾎﾞﾙﾄ Bolt	2	2	
1-37	9701-1-1108	ｽﾊﾟｰｸﾌﾟﾗｸﾞ、NGK: PZFR6H Spark Plug, NGK: PZFR6H	3	3	011601XC～
	9701-1-4016	ｽﾊﾟｰｸﾌﾟﾗｸﾞ、ﾁｬﾝﾋﾟｵﾝ: RC10ECC Spark Plug, CHAMPION: RC10ECC	(3)	(3)	～ # 006249XC
1-38	393-01160-0	ﾗｲﾝﾁｪｯｸﾊﾞﾙﾌﾞ Line Check Valve	2	2	ﾙﾌﾞﾘｹｰｼｮﾝﾎｰｽ for Lubrication Hose
1-39	3T7-01175-0	T ﾆｯﾌﾟﾙ (ﾊﾞﾙﾌﾞ付) T-Nipple (with Valve)	1	1	40A # 40001～ 50A # 11273～
1-40	98AB-5-0075	ｺﾞﾑﾎｰｽ Rubber Hose	2	2	
1-41	98AB-5-0115	ｺﾞﾑﾎｰｽ Rubber Hose	1	1	
1-42	98AB-5-0250	ｺﾞﾑﾎｰｽ Rubber Hose	1	1	
1-43	353-01138-0	ｳｫｰﾀﾆｯﾌﾟﾙ Water Nipple	1	1	
1-44	3T4-06972-0	ｸﾗﾝﾌﾟ、6.5-87P Clamp, 6.5-87P	1	1	
1-45	3T5-06971-0	ｸﾗﾝﾌﾟ、8.5-85P Clamp, 8.5-85P	1	1	
1-46	338-02215-0	ｸﾘｯﾌﾟ、φ10 Clip, φ10	9	9	
1-47	309-06972-0	ｸﾗﾝﾌﾟ、6.5-47.5P Clamp, 6.5-47.5P	1	1	

ﾋﾟｽﾄﾝ・ｸﾗﾝｸｼｬﾌﾄ
Fig.2 PISTON・CRANK SHAFT

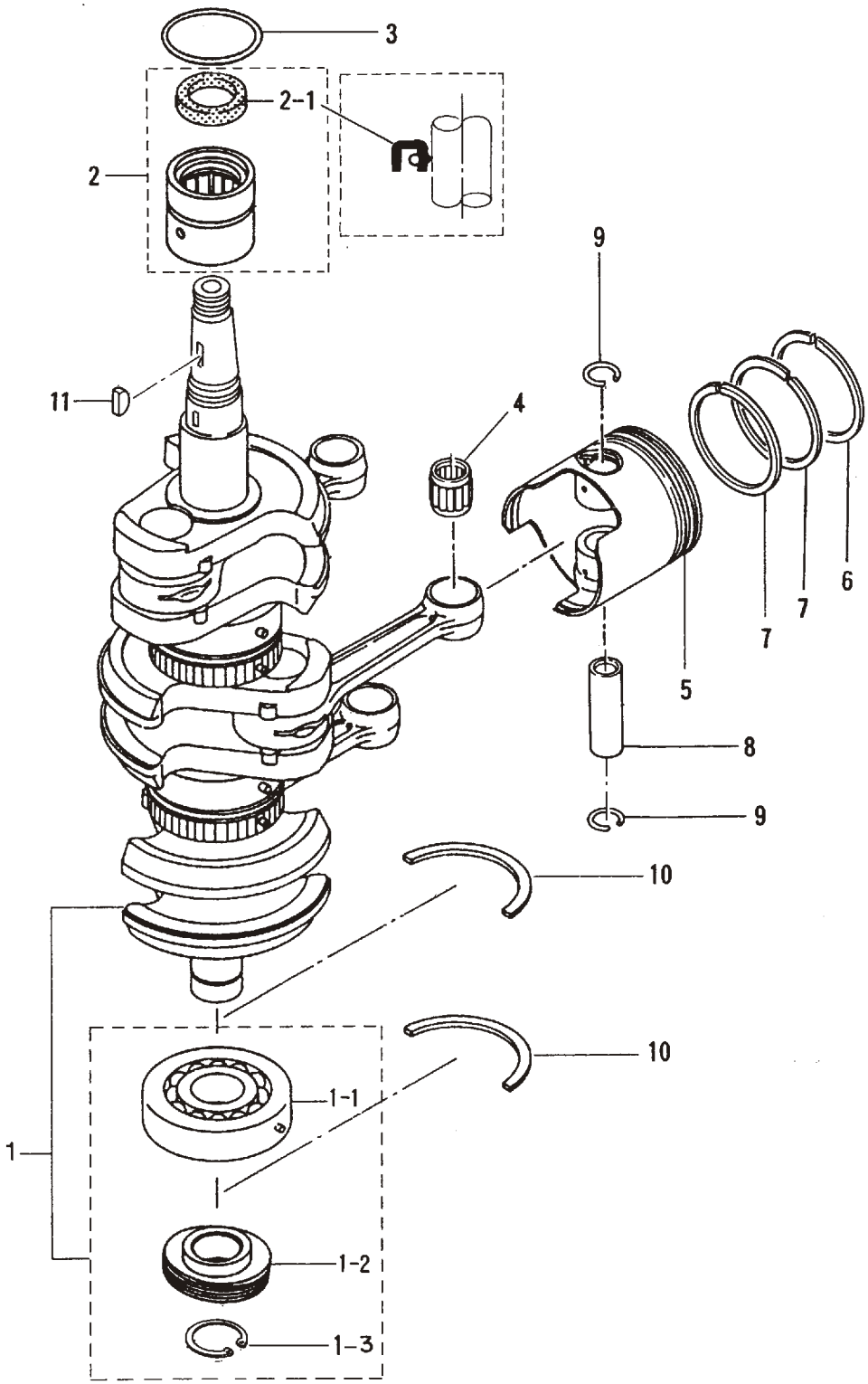

見出番号 Ref. No.	部品番号 Part No.	部　品　名 Description	個数 Q'ty D 50 B	個数 Q'ty D 40 B	備　考 Remarks
2-1	3T5-00050-0	ｸﾗﾝｸｼｬﾌﾄｱｯｼ Crankshaft Ass'y	1	1	
2-1-1	3J2-00114-0	ﾍﾞｱﾘﾝｸﾞ、6305 ＊ Bearing, 6305	1	1	
2-1-2	3C8-09060-0	ｵｲﾙﾎﾟﾝﾌﾟﾄﾞﾗｲﾌﾞｷﾞﾔ ＊ Oil Pump Drive Gear	1	1	
2-1-3	945107-2500	C ﾘﾝｸﾞ、d=25 ＊ C-Ring, d=25	1	1	
2-2	3T5-00113-0	ﾒｲﾝﾍﾞｱﾘﾝｸﾞ（ｱｯﾊﾟ） Main Bearing (Upper)	1	1	
2-2-1	3T5-00121-0	ｵｲﾙｼｰﾙ、36-46-6 ＊ Oil Seal, 36-46-6	1	1	
2-3	353-00108-0	O ﾘﾝｸﾞ、2.4-44.7 O-Ring, 2.4-44.7	1	1	
2-4	345-00042-0	ﾆｰﾄﾞﾙﾍﾞｱﾘﾝｸﾞ、17-21-27 Needle Bearing, 17-21-27	3	3	
2-5	3T5-00001-0	ﾋﾟｽﾄﾝ (STD) Piston (STD)	3	3	
	3T5-00004-0	ﾋﾟｽﾄﾝ (0.5mm O/S) Piston (0.5mm O/S)	3	3	OPT
2-6	3T5-00011-0	ﾋﾟｽﾄﾝﾘﾝｸﾞ 1st (STD) Piston Ring 1st (STD)	3	3	
	3T5-00014-0	ﾋﾟｽﾄﾝﾘﾝｸﾞ 1st (0.5mm O/S) Piston Ring 1st (0.5mm O/S)	3	3	OPT
2-7	3T5-00012-0	ﾋﾟｽﾄﾝﾘﾝｸﾞ 2nd (STD) Piston Ring 2nd (STD)	6	6	
	3T5-00015-0	ﾋﾟｽﾄﾝﾘﾝｸﾞ 2nd (0.5mm O/S) Piston Ring 2nd (0.5mm O/S)	6	6	OPT
2-8	3C8-00021-0	ﾋﾟｽﾄﾝﾋﾟﾝ Piston Pin	3	3	
2-9	334-00024-1	ﾋﾟｽﾄﾝﾋﾟﾝｸﾘｯﾌﾟ Piston Pin Clip	6	6	
2-10	346-00115-0	ｸﾗﾝｸｼｬﾌﾄｽﾗｽﾄﾌﾟﾚｰﾄ Crank Shaft Thrust Plate	2	2	
2-11	334-00131-0	ﾏｸﾞﾈﾄｷｰ Magneto Key	1	1	

エアチャンバ（エアボックス）
Fig.3 AIR CHAMBER (AIR BOX)

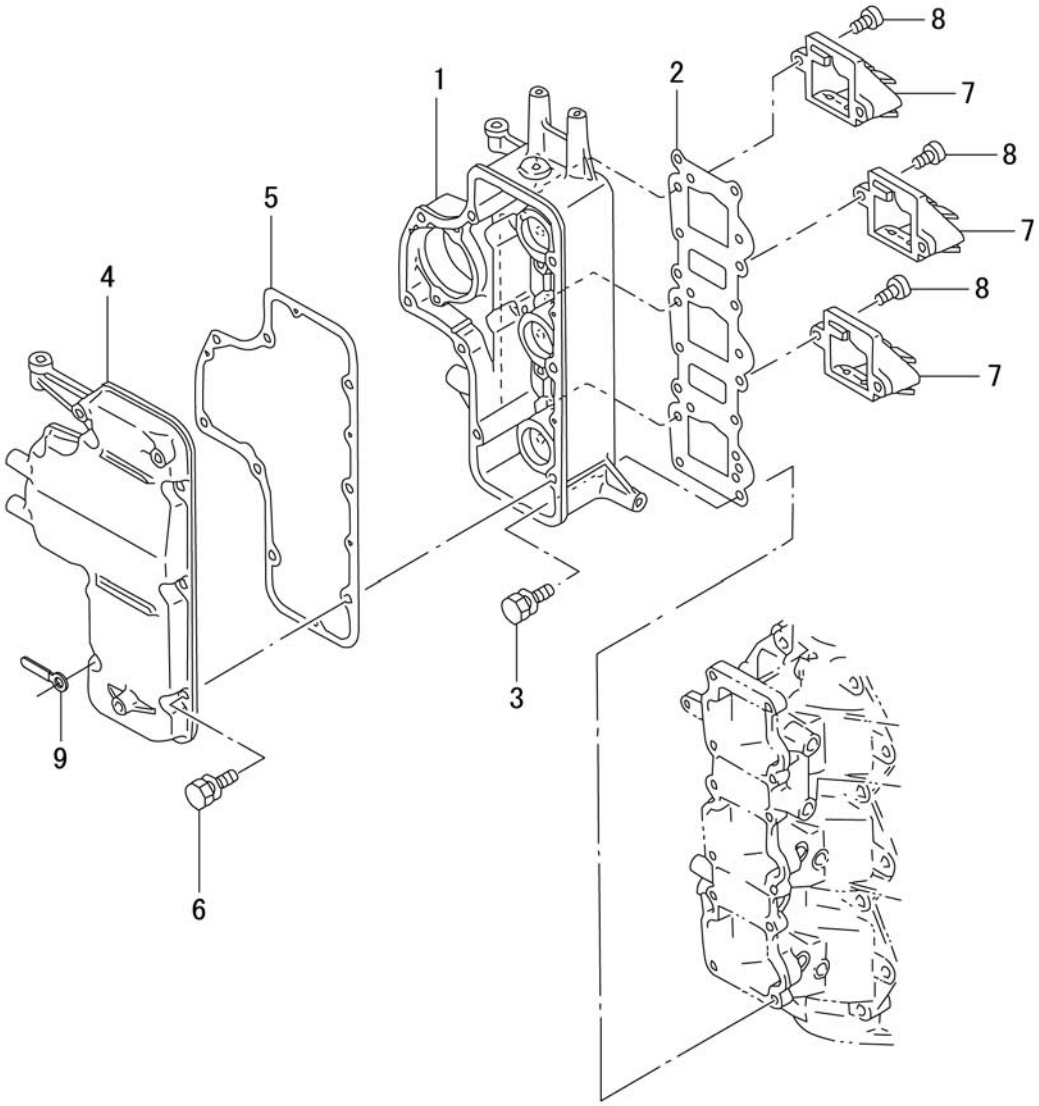

見出番号 Ref. No.	部品番号 Part No.	部　品　名 Description	個数 Q'ty D 50 B	個数 Q'ty D 40 B	備　考 Remarks
3-1	3T5B02240-0	ｴｱﾁｬﾝﾊﾞ Air Chamber	1	1	
3-2	3T5-02104-1	ﾘｰﾄﾞﾊﾞﾙﾌﾞｶﾞｽｹｯﾄ Reed Valve Gasket	1	1	
3-3	3T5-02241-0	ﾎﾞﾙﾄ、6-25 ﾌﾟﾚｺｰﾄ Bolt, 6-25 Pre-coated	12	12	
3-4	3T5B02244-0	ｴｱﾁｬﾝﾊﾞｶﾊﾞｰ Air Chamber Cover	1	1	
3-5	3T5-02245-0	ｴｱﾁｬﾝﾊﾞｶﾊﾞｰｶﾞｽｹｯﾄ Air Chamber Cover Gasket	1	1	
3-6	910103-5625	ﾎﾞﾙﾄ Bolt	8	8	or 910113-5625
3-7	3T5-02100-0	ﾘｰﾄﾞﾊﾞﾙﾌﾞｱｯｼ Reed Valve Ass'y	3	3	
3-8	921521-6516	ｽｸﾘｭ Screw	6	6	
3-9	3Z5-06972-0	ｸﾗﾝﾌﾟ、6.5-120P Clamp, 6.5-120P	1	1	

エアレール
Fig.4 AIR RAIL

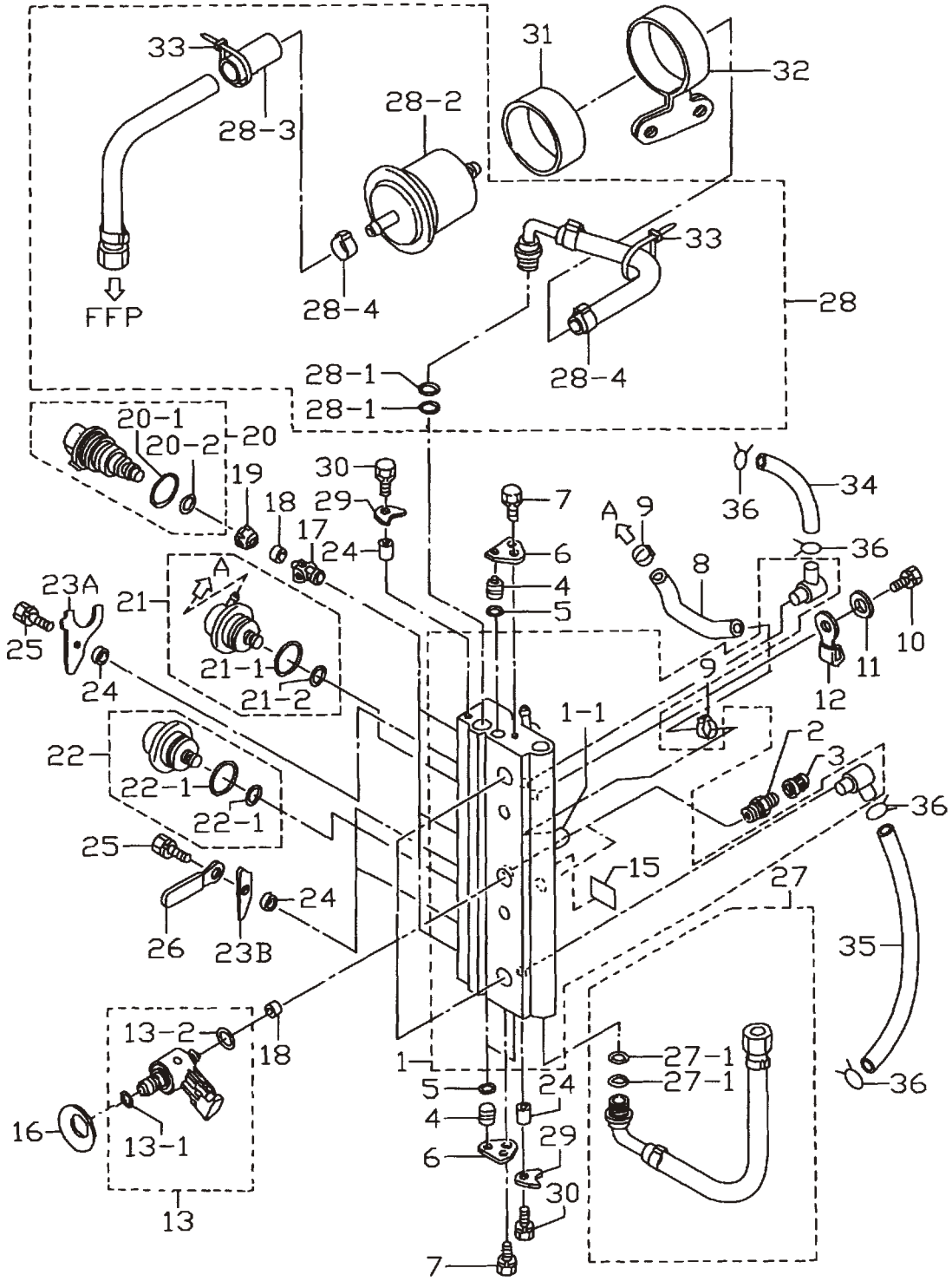

見出番号 Ref. No.	部品番号 Part No.	部　品　名 Description	個数 Q'ty D 50 B	D 40 B	備　考 Remarks
4-1	3T5-10080-1	ｴｱﾚｰﾙ Air Rail	1	1	
4-1-1	3T5-10166-0	L ﾆｯﾌﾟﾙ ＊ L-Nipple	1	1	
4-2	3T5-10098-0	ﾊﾞﾙﾌﾞ Valve	2	2	
4-3	3T5-10099-0	ﾊﾞﾙﾌﾞｷｬｯﾌﾟ Valve Cap	2	2	
4-4	3T5-10167-0	ﾌﾟﾗｸﾞ、φ10.5 Plug, φ10.5	3	3	
4-5	3T5-10164-0	O ﾘﾝｸﾞ、1.9-6.8 O-Ring, 1.9-6.8	3	3	
4-6	3T5-10165-0	ﾌﾟﾗｸﾞｽﾄｯﾊﾟ Plug Stopper	2	2	
4-7	910103-6612	ﾎﾞﾙﾄ Bolt	4	4	
4-8	98AJ-4-0105	ｴｱﾎｰｽ Air Hose	1	1	
4-9	3T5-10091-0	ｸﾗﾝﾌﾟ、29/64 Clamp, 29/64	2	2	
4-10	910103-0865	ﾎﾞﾙﾄ Bolt	2	2	
4-11	940103-0800	ﾜｯｼｬ Washer	2	2	or 940113-0800
4-12	3T5-06972-0	ｸﾗﾝﾌﾟ、8.5-70P Clamp, 8.5-70P	1	1	
4-13	3Y7-10310-0	ｴｱｲﾝｼﾞｪｸﾀ Air Injector	3	3	# 011601XC～
	3T5-10310-1	ｴｱｲﾝｼﾞｪｸﾀ Air Injector	(3)	(3)	～ # 006249XC
4-13-1	3T5-10317-0	O ﾘﾝｸﾞ、5-52 ＊ O-Ring, 5-52	3	3	φ1-10
4-13-2	3Y9-10311-0	O ﾘﾝｸﾞ、2.4-9.6 ＊ O-Ring, 2.4-9.6	3	3	φ2.4-14.2 # 011601XC～
	3T5-10311-0	O ﾘﾝｸﾞ、2-13 ＊ O-Ring, 2-13	(3)	(3)	φ1.8-145 ～ # 006249XC
4-15	3T5-72196-0	ｴｱﾚｰﾙﾃﾞｶﾙ Air Rail Decal	1	1	
4-16	3Y9-10312-0	ｴｱｲﾝｼﾞｪｸﾀﾃﾞｨｽｸｽﾌﾟﾘﾝｸﾞ Air Injector Disc Spring	3	3	# 011601XC～
	3T5-10312-0	ｴｱｲﾝｼﾞｪｸﾀﾃﾞｨｽｸｽﾌﾟﾘﾝｸﾞ Air Injector Disc Spring	(3)	(3)	～ # 006249XC
4-17	3T5-10314-0	ﾌｭｴﾙｲﾝｼﾞｪｸﾀｲﾝｻｰﾄ Fuel Injector Insert	3	3	
4-18	3T5-10316-0	ｺﾝﾌﾟﾚｯｼｮﾝｼｰﾙ Compression Seal	6	6	
4-19	3T5-10315-0	ﾌｭｴﾙｲﾝｼﾞｪｸﾀｱﾀﾞﾌﾟﾀ Fuel Injector Adapter	3	3	
4-20	3T5-10300-0	ﾌｭｴﾙｲﾝｼﾞｪｸﾀ Fuel Injector	3	3	
4-20-1	3T5-10304-0	O ﾘﾝｸﾞ、2.8-20.2 ＊ O-Ring, 2.8-20.2	3	3	
4-20-2	3T5-10303-0	O ﾘﾝｸﾞ、3.5-7.5 ＊ O-Ring, 3.5-7.5	3	3	
4-21	3T5-10148-0	ﾌｭｴﾙﾚｷﾞｭﾚｰﾀ Fuel Regulator	1	1	
4-21-1	3T5-10095-0	O ﾘﾝｸﾞ、2.5-20 ＊ O-Ring, 2.5-20	1	1	
4-21-2	3T5-10094-0	O ﾘﾝｸﾞ、2.5-5 ＊ O-Ring, 2.5-5	1	1	

エアレール
Fig.4 AIR RAIL

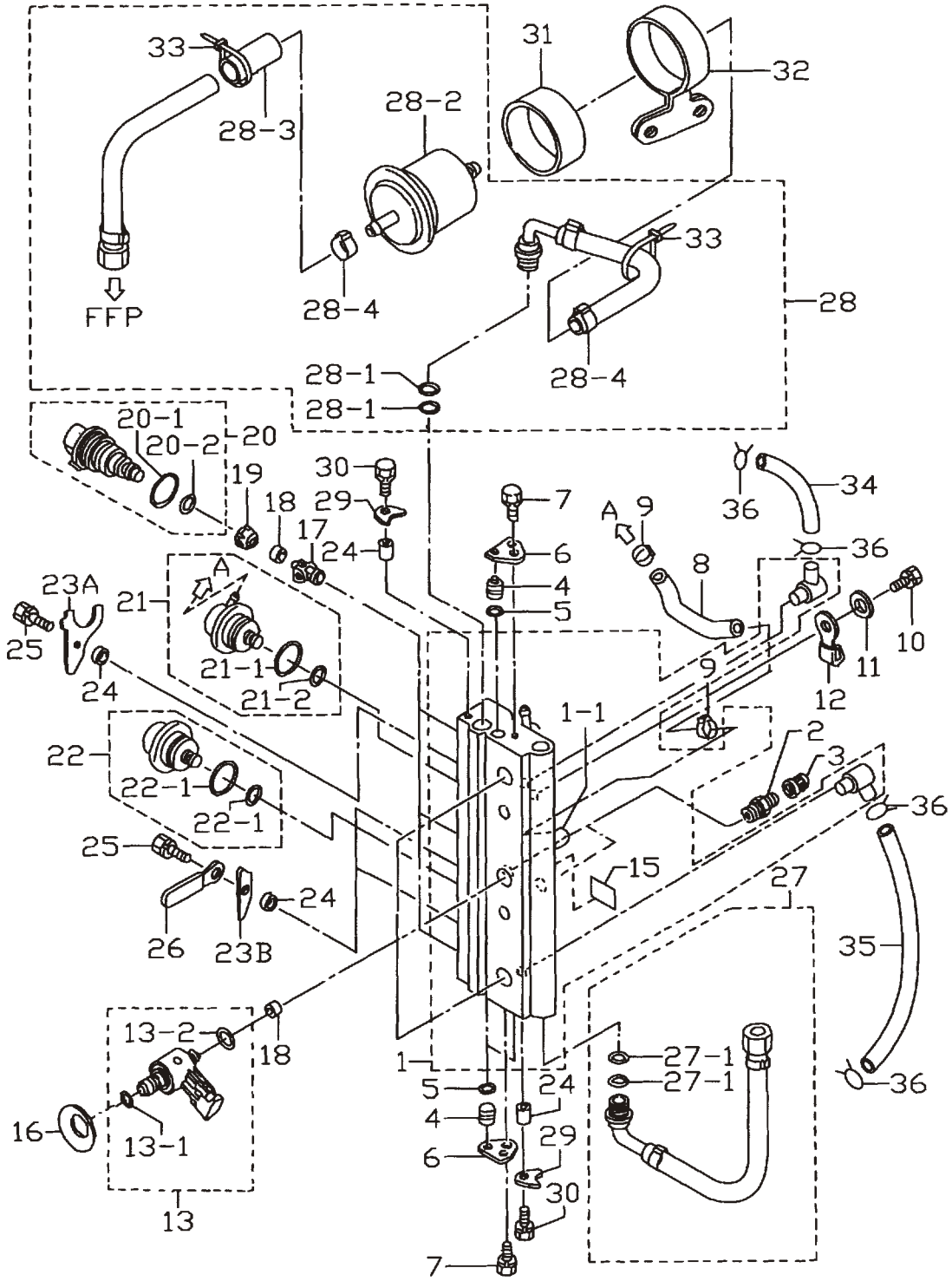

見出番号 Ref. No.	部品番号 Part No.	部　品　名 Description	個数 Q'ty D 50 B	個数 Q'ty D 40 B	備　考 Remarks
4-22	3T5-10090-0	ｴｱﾚｷﾞｭﾚｰﾀ Air Regulator	1	1	
4-22-1	3T5-10095-0	Ｏ ﾘﾝｸﾞ、2.5-20 ＊ O-Ring, 2.5-20	1	1	
4-22-2	3T5-10094-0	Ｏ ﾘﾝｸﾞ、2.5-5 ＊ O-Ring, 2.5-5	1	1	
4-23A	3Y9-10302-0	ﾌｭｴﾙｲﾝｼﾞｪｸﾀﾎｰﾙﾃﾞｨﾝｸﾞﾌﾟﾚｰﾄ Fuel Injector Holding Plate	1	1	
4-23B	3T5-10302-0	ﾌｭｴﾙｲﾝｼﾞｪｸﾀﾎｰﾙﾃﾞｨﾝｸﾞﾌﾟﾚｰﾄ Fuel Injector Holding Plate	2	2	
4-24	3T5-10153-0	ｶﾗｰ、6.7-12.7-3 Collar, 6.7-12.7-3	5	5	
4-25	910103-6616	ﾎﾞﾙﾄ Bolt	3	3	
4-26	309-06972-0	ｸﾗﾝﾌﾟ、6.5-47.5P Clamp, 6.5-47.5P	1	1	
4-27	3T5-10088-0	ｴｱﾎｰｽ Air Hose	1	1	
4-27-1	3T5-10162-0	Ｏ ﾘﾝｸﾞ、1.9-9.8 ＊ O-Ring, 1.9-9.8	2	2	
4-28	3T5-10089-1	ﾌｭｴﾙﾎｰｽ Fuel Hose	1	1	
4-28-1	3T5-10162-0	Ｏ ﾘﾝｸﾞ、1.9-9.8 ＊ O-Ring, 1.9-9.8	2	2	
4-28-2	3T5B10143-0	高圧ﾌｭｴﾙﾌｨﾙﾀ ＊ High Pressure Fuel Filter	1	1	
4-28-3	3T5-06157-0	ﾌﾟﾛﾃｸﾄﾁｭｰﾌﾞ ＊ Protect Tube	1	1	
4-28-4	3T5-10086-0	ｸﾗﾝﾌﾟ、21/32 ＊ Clamp, 21/32	2	2	
4-29	3T5-10169-0	ﾆｯﾌﾟﾙﾎｰﾙﾃﾞｨﾝｸﾞﾌﾟﾚｰﾄ Nipple Holding Plate	2	2	
4-30	910103-6616	ﾎﾞﾙﾄ Bolt	2	2	
4-31	3T5-10145-0	ﾌｭｴﾙﾌｨﾙﾀﾗﾊﾞｰﾏｳﾝﾄ Fuel Filter Rubber Mount	1	1	
4-32	3T5-10144-1	ﾌｭｴﾙﾌｨﾙﾀﾊﾞﾝﾄﾞ Fuel Filter Band	1	1	
4-33	3T5-84398-0	ﾘｰﾄﾞﾜｲﾔﾊﾞﾝﾄﾞ、104 Lead Wire Band, 104	2	2	
4-34	98AB-5-0600	ﾌｭｴﾙﾊﾟｲﾌﾟ Fuel Pipe	1	1	
4-35	98AB-5-0280	ｴｱﾊﾟｲﾌﾟ Air Pipe	1	1	
4-36	338-02215-0	ｸﾘｯﾌﾟ、φ10 Clip, φ10	4	4	

FFP アッシ
Fig.5 FFP ASS'Y

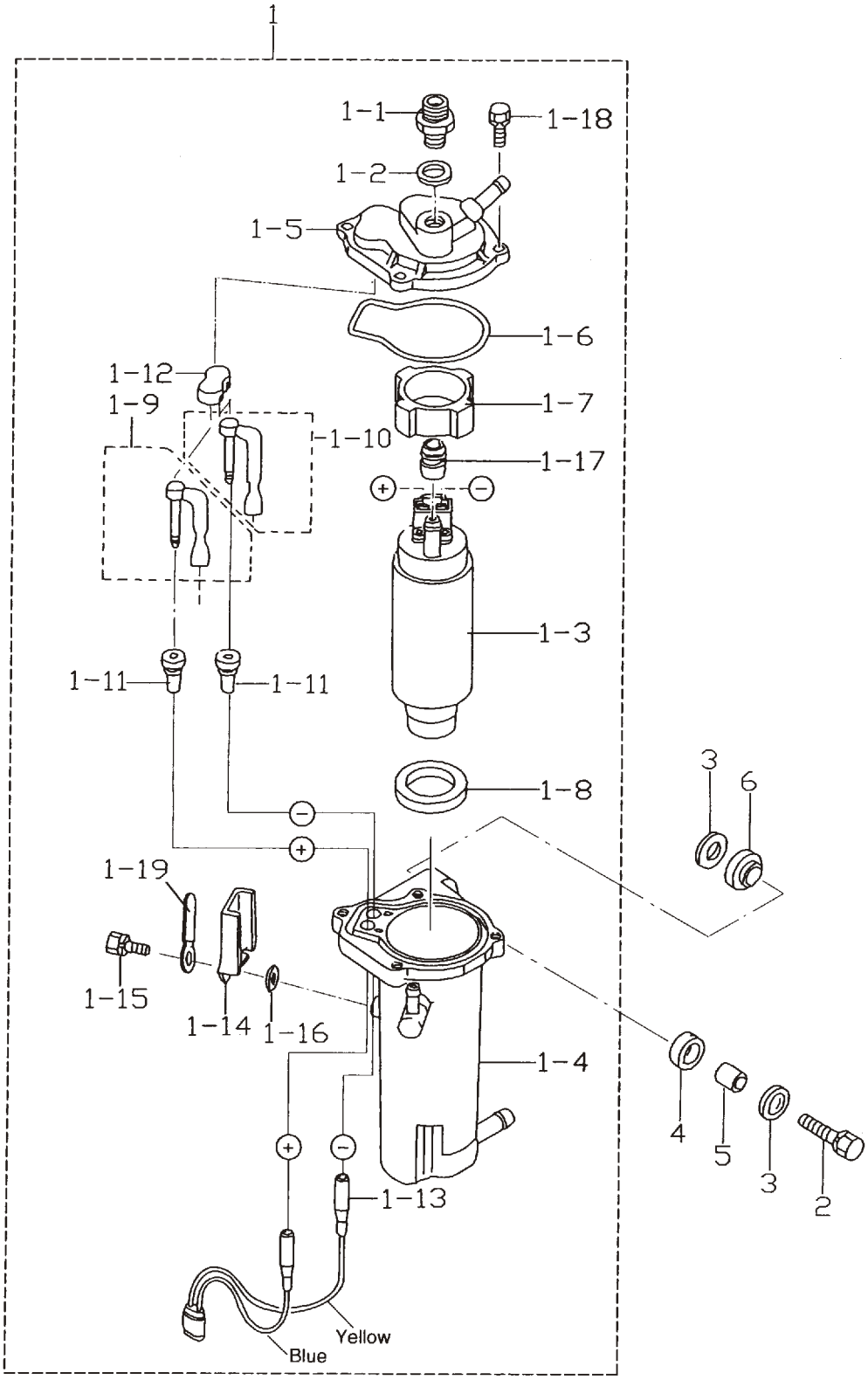

見出番号 Ref. No.	部品番号 Part No.	部　品　名 Description	個数 Q'ty D 50 B	個数 Q'ty D 40 B	備　考 Remarks
5-1	3T5-04310-0	FFP (ﾌｭｴﾙﾌｨｰﾄﾞﾎﾟﾝﾌﾟ) ｱｯｼ FFP (Fuel Feed Pump) Ass'y	1	1	
5-1-1	3T5-04308-0	ﾎｰｽｼﾞｮｲﾝﾄｱﾀﾞﾌﾟﾀ * Hose Joint Adapter	1	1	
5-1-2	3T5-04309-0	ﾒﾀﾙﾜｯｼｬ、10.2-17-2 * Metal Washer, 10.2-17-2	1	1	
5-1-3	3T5-04302-0	ﾌｭｴﾙﾌｨｰﾄﾞﾎﾟﾝﾌﾟ * Fuel Feed Pump	1	1	
5-1-4	3T5-04311-0	FFP ｹｰｽ * FFP Case	1	1	
5-1-5	3T5-04312-0	FFP ｹｰｽ (ｱｯﾊﾟ) * FFP Case (Upper)	1	1	
5-1-6	3T5-04116-0	O ﾘﾝｸﾞ * O-Ring,	1	1	
5-1-7	3T5-04313-0	FFP ｸﾞﾛﾒｯﾄ (ｱｯﾊﾟ) * FFP Grommet (Upper)	1	1	
5-1-8	3T5-04314-0	FFP ｸﾞﾛﾒｯﾄ (ﾛﾜ) * FFP Grommet (Lower)	1	1	
5-1-9	3T5-04236-0	ｹｰﾌﾞﾙﾀｰﾐﾅﾙ (＋) * Cable Terminal (Positive)	1	1	
5-1-10	3T5-04237-0	ｹｰﾌﾞﾙﾀｰﾐﾅﾙ (－) * Cable Terminal (Negative)	1	1	
5-1-11	3T5-04317-0	ｹｰﾌﾞﾙﾀｰﾐﾅﾙｸﾞﾛﾒｯﾄ * Cable Terminal Grommet	2	2	
5-1-12	3T5-04318-0	ｹｰﾌﾞﾙﾀｰﾐﾅﾙｸﾞﾛﾒｯﾄ (ｱｯﾊﾟ) * Cable Terminal Grommet (Upper)	1	1	
5-1-13	3T5-04238-0	FFP ｺｰﾄﾞ * FFP Cord	1	1	
5-1-14	3T5-04239-0	FFP ｺｰﾄﾞｶﾊﾞｰ * FFP Cord Cover	1	1	
5-1-15	910103-5512	ﾎﾞﾙﾄ * Bolt	1	1	
5-1-16	940103-0500	ﾜｯｼｬ * Washer	1	1	
5-1-17	3T5-04319-0	ﾊﾟｲﾌﾟｸﾞﾛﾒｯﾄ * Pipe Grommet	1	1	
5-1-18	910103-6518	ﾎﾞﾙﾄ * Bolt	4	4	
5-1-19	309-06972-0	ｸﾗﾝﾌﾟ、6.5-47.5P * Clamp, 6.5-47.5P	1	1	
5-2	910103-6630	ﾎﾞﾙﾄ Bolt	2	2	
5-3	3R0-66308-0	ﾜｯｼｬ、6-16-1.5 Washer, 6-16-1.5	4	4	
5-4	3F3-06920-0	ﾗﾊﾞｰﾏｳﾝﾄ、9-12-2 Rubber Mount, 9-12-2	2	2	
5-5	346-67114-0	ｽﾍﾟｻ、6.2-9-15.7 Spacer, 6.2-9-15.7	2	2	
5-6	3T5-06920-0	ﾗﾊﾞｰﾏｳﾝﾄ、8.5-18-7 Rubber Mount, 8.5-18-7	2	2	

ベーパセパレータ & フュエルライン
Fig.6 VAPOR SEPARATOR & FUEL LINE

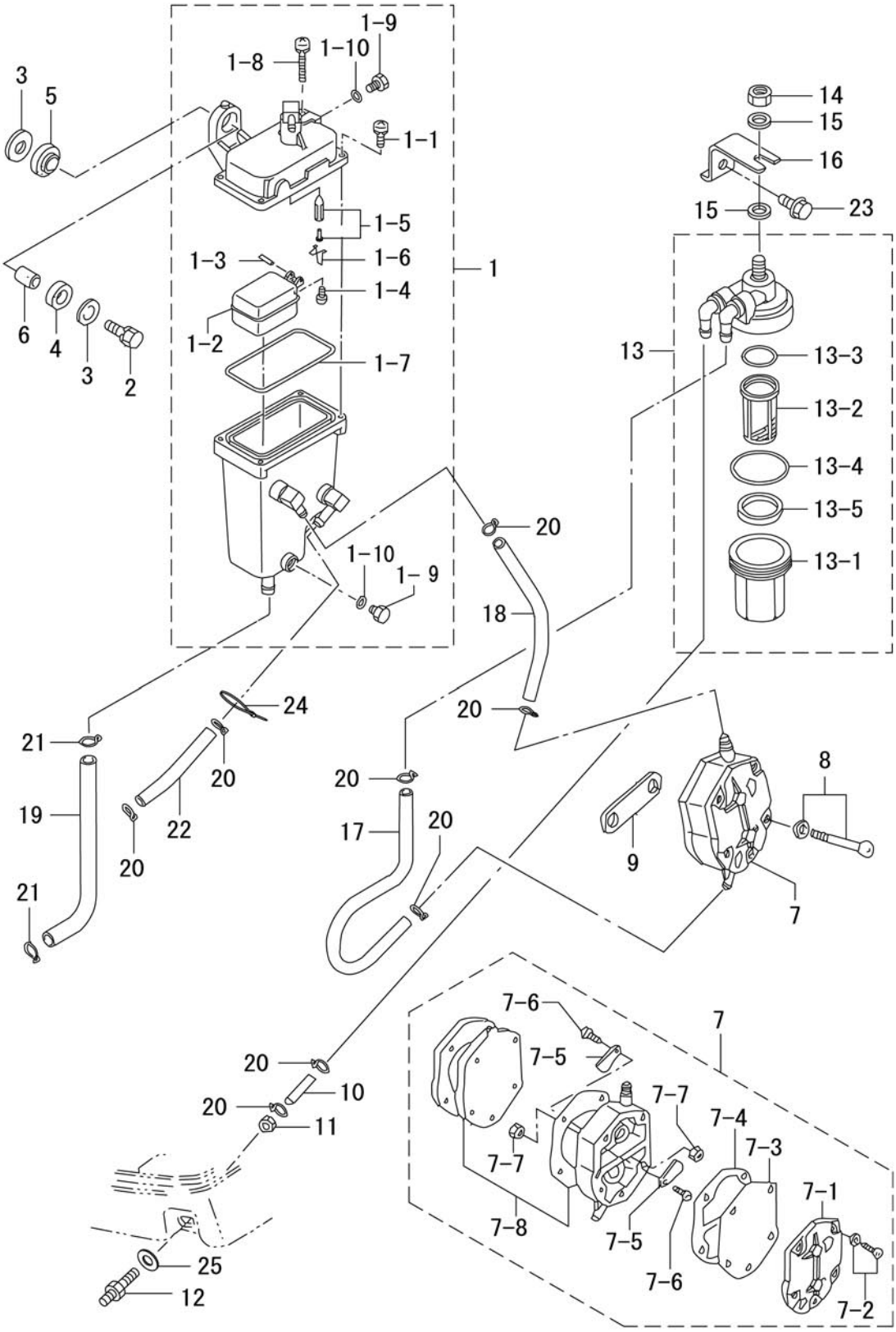

見出番号 Ref. No.	部品番号 Part No.	部　品　名 Description	個数 Q'ty D 50 B	D 40 B	備　考 Remarks
6-1	3T5-10150-1	ﾍﾞｰﾊﾟｾﾊﾟﾚｰﾀ Vapor Separator	1	1	
6-1-1	922531-6414	ｽｸﾘｭ ＊ Screw	3	3	
6-1-2	3T5-03230-0	ﾌﾛｰﾄ ＊ Float	1	1	
6-1-3	3F3-03232-0	ﾌﾛｰﾄｱｰﾑﾋﾟﾝ ＊ Float Arm Pin	1	1	
6-1-4	921503-0408	ｽｸﾘｭ ＊ Screw	1	1	
6-1-5	3R3-03239-0	ﾌﾛｰﾄﾊﾞﾙﾌﾞ ＊ Float Valve	1	1	ﾊﾞﾙﾌﾞﾋﾟﾝ付 with Valve Pin
6-1-6	344-03244-0	ｸﾘｯﾌﾟ ＊ Clip	1	1	
6-1-7	3T5-03235-0	O ﾘﾝｸﾞ ＊ O-Ring	1	1	
6-1-8	921503-6430	ｽｸﾘｭ ＊ Screw	1	1	
6-1-9	345-03292-0	ﾄﾞﾚﾝｽｸﾘｭ ＊ Drain Screw	2	2	
6-1-10	336-03293-0	O ﾘﾝｸﾞ ＊ O-Ring	2	2	
6-2	910103-6630	ﾎﾞﾙﾄ Bolt	2	2	
6-3	346-67115-0	ﾜｯｼｬ、6.5-21-1 Washer, 6.5-21-1	4	4	
6-4	346-67113-0	ﾗﾊﾞｰﾏｳﾝﾄ、8.5-14-2.5 Rubber Mount, 8.5-14-2.5	2	2	
6-5	3B7-06920-0	ﾗﾊﾞｰﾏｳﾝﾄ、8.5-14-2.5 Rubber Mount, 8.5-14-2.5	2	2	
6-6	346-67114-0	ｽﾍﾟｰｻ、6.2-9-15.7 Spacer, 6.2-9-15.7	2	2	
6-7	356-04000-1	ﾌｭｴﾙﾎﾟﾝﾌﾟ Fuel Pump	1	1	
6-7-1	334-04004-0	ﾎﾟﾝﾌﾟｶﾊﾞｰ ＊ Pump Cover	1	1	
6-7-2	922512-6528	ｽｸﾘｭ ＊ Screw	3	3	
6-7-3	334-04005-0	ﾎﾟﾝﾌﾟﾀﾞｲｱﾌﾗﾑ ＊ Pump Diaphragm	1	1	
6-7-4	334-04007-0	ﾀﾞｲｱﾌﾗﾑｶﾞｽｹｯﾄ B ＊ Diaphragm Gasket “B”	1	1	
6-7-5	356-04044-0	ﾁｪｯｸﾊﾞﾙﾌﾞ ＊ Check Valve	2	2	
6-7-6	921722-0306	ｽｸﾘｭ ＊ Screw	2	2	
6-7-7	930222-0300	ﾅｯﾄ ＊ Nut	2	2	
6-7-8	356-04030-0	ﾀﾞｲｱﾌﾗﾑｶﾞｽｹｯﾄｾｯﾄ ＊ Diaphragm Gasket Set	1	1	
6-8	910103-6640	ﾎﾞﾙﾄ Bolt	2	2	
6-9	346-04901-1	ﾌｭｴﾙﾎﾟﾝﾌﾟｶﾞｽｹｯﾄ Fuel Pump Gasket	1	1	
6-10	98AB-5-0260	ﾌｭｴﾙﾊﾟｲﾌﾟ E Fuel Pipe “E”	1	1	
6-11	332-70261-0	ﾅｯﾄ、10-P1.25 Nut, 10-P1.25	1	1	
6-12	3B2-70260-1	ﾌｭｴﾙｺﾈｸﾀ（ｴﾝｼﾞﾝ、ﾒｰﾙ） Fuel Connector (Engine, Male)	1	1	

ベーパセパレータ & フュエルライン
Fig.6 VAPOR SEPARATOR & FUEL LINE

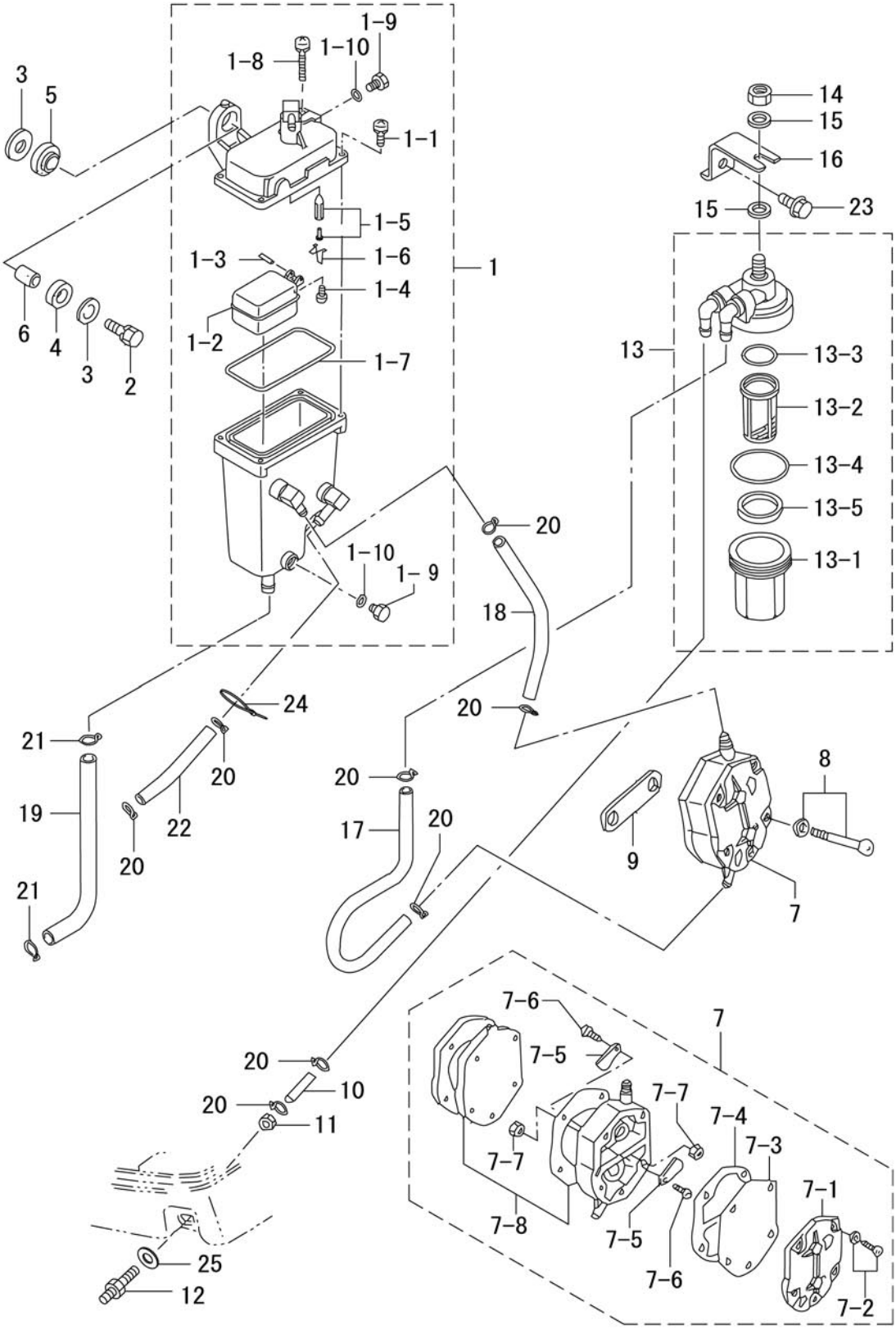

見出番号 Ref. No.	部品番号 Part No.	部　品　名 Description	個数 Q'ty D 50 B	個数 Q'ty D 40 B	備　考 Remarks
6-13	3T5-02230-0	ﾌｭｴﾙﾌｨﾙﾀ Fuel Filter	1	1	
6-13-1	3B7-02237-0	ﾊﾟｯﾌﾟ ＊ Cup	1	1	
6-13-2	3B7-02234-0	ﾌｨﾙﾀ ＊ Filter	1	1	
6-13-3	3B7-02236-0	O ﾘﾝｸﾞ B ＊ O-Ring B	1	1	
6-13-4	3B7-02235-0	O ﾘﾝｸﾞ A ＊ O-Ring A	1	1	
6-13-5	3T5-02229-0	ﾌﾛｰﾄ ＊ Float	1	1	
6-14	930103-0800	ﾅｯﾄ Nut	1	1	or 930113-0800
6-15	940103-0800	ﾜｯｼｬ Washer	2	2	or 940113-0800
6-16	3T5-02239-0	ﾌｨﾙﾀﾌﾟﾚｰﾄ Filter Plate	1	1	
6-17	98AB-5-0260	ｺﾞﾑﾎｰｽ Rubber Hose	1	1	
6-18	98AB-5-0190	ｺﾞﾑﾎｰｽ Rubber Hose	1	1	
6-19	98AB-7-0180	ｺﾞﾑﾎｰｽ Rubber Hose	1	1	
6-20	338-02215-0	ｸﾘｯﾌﾟ、φ10 Clip, φ10	8	8	
6-21	3C7-02215-0	ｸﾘｯﾌﾟ、φ12 Clip, φ12	2	2	
6-22	98AB-5-0075	ｺﾞﾑﾎｰｽ Rubber Hose	1	1	
6-23	910103-6614	ﾎﾞﾙﾄ Bolt	1	1	
6-24	3T5-84398-0	ﾘｰﾄﾞﾜｲﾔﾊﾞﾝﾄﾞ、104 Lead Wire Band, 104	1	1	
6-25	336-70112-0	ｶﾞｽｹｯﾄ、10.2-16-0.5 Gasket, 10.2-16-0.5	1	1	

スロットル
Fig.7 THROTTLE

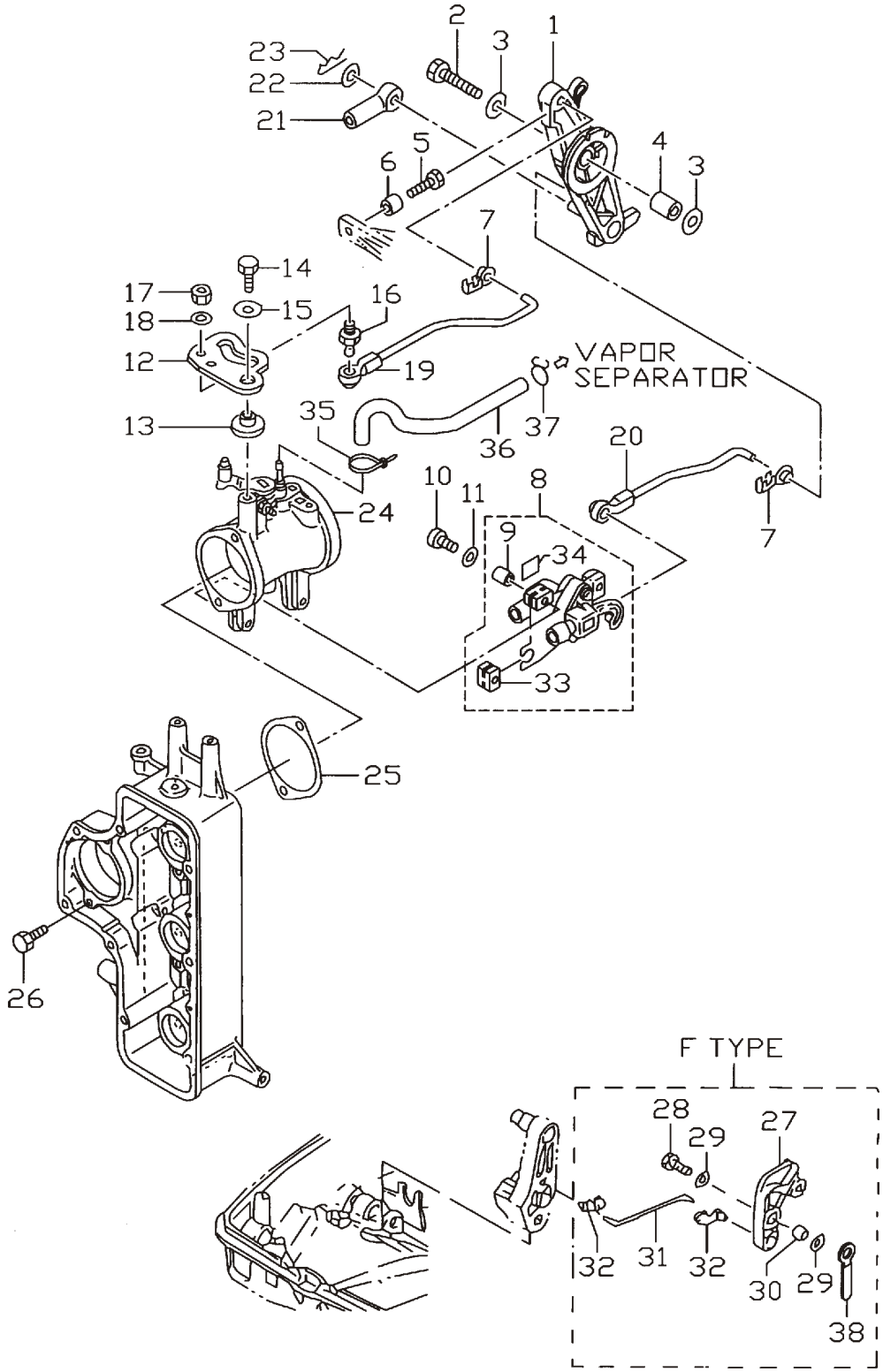

見出番号 Ref. No.	部品番号 Part No.	部　品　名 Description	個数 Q'ty D 50 B	個数 Q'ty D 40 B	備　考 Remarks
7-1	3C8-63711-1	ｱﾄﾞﾊﾞﾝｻｱｰﾑ Advancer Arm	1	1	
7-2	910103-0635	ﾎﾞﾙﾄ Bolt	1	1	
7-3	346-67115-0	ﾜｯｼｬ、6.5-21-1 Washer, 6.5-21-1	2	2	
7-4	3C8-63732-0	ｶﾗｰ、6.2-12-17 Collar, 6.2-12-17	1	1	
7-5	910103-0618	ﾎﾞﾙﾄ Bolt	1	1	
7-6	353-76079-0	ｶﾗｰ、6.2-9-9.3 Collar, 6.2-9-9.3	1	1	
7-7	3C8-63733-0	ﾛｯﾄﾞｽﾅｯﾌﾟ、5-3 Rod Snap, 5-3	3	3	
7-8	3T5-10110-0	TPS TPS	1	1	
7-9	3T5-10128-0	ｶﾗｰ、4.2-6-10.5 Collar, 4.2-6-10.5	3	3	
7-10	921503-6420	ｽｸﾘｭ Screw	3	3	
7-11	3T5-10129-0	ﾜｯｼｬ、4.2-12.5-0.8 Washer, 4.2-12.5-0.8	3	3	
7-12	3T5-63718-0	ｽﾛｯﾄﾙｶﾑ Throttle Cam	1	1	
7-13	3T5-63721-0	ﾌﾞｯｼﾝｸﾞ、6-24-7 Bushing, 6-24-7	1	1	
7-14	910103-6618	ﾎﾞﾙﾄ Bolt	1	1	
7-15	346-67115-0	ﾜｯｼｬ、6.5-21-1 Washer, 6.5-21-1	1	1	
7-16	346-05228-1	ﾎﾞｰﾙｼﾞｮｲﾝﾄ B Ball Joint “B”	1	1	
7-17	930203-0600	ﾅｯﾄ Nut	1	1	
7-18	940103-0600	ﾜｯｼｬ Washer	1	1	
7-19	3T5-63702-1	ｽﾛｯﾄﾙﾘﾝｸﾛｯﾄﾞ Throttle Link Rod	1	1	Old Part No. 3T5-63716-0
7-20	3T5-10109-1	TPS ﾘﾝｸﾛｯﾄﾞ TPS Link Rod	1	1	
7-21	3B7-83715-1	ｹｰﾌﾞﾙｼﾞｮｲﾝﾄ Cable Joint	1	1	
7-22	3AA-83719-0	ﾜｯｼｬ、8.5-18-1.6 Washer, 8.5-18-1.6	1	1	P ﾀｲﾌﾟ for “P” Type
7-23	951603-0800	ｽﾅｯﾌﾟﾋﾟﾝ、d=8 Snap Pin, d=8	1	1	
7-24	3T5-10100-0	ｽﾛｯﾄﾙﾎﾞﾃﾞｨ Throttle Body	1	-	
	3T4-10100-0	ｽﾛｯﾄﾙﾎﾞﾃﾞｨ Throttle Body	-	1	ﾏｰｸ 3T4 mark 3T4
7-25	3T5-10104-0	ｽﾛｯﾄﾙﾎﾞﾃﾞｨｶﾞｽｹｯﾄ Throttle Body Gasket	1	1	
7-26	3T5-02241-0	ﾎﾞﾙﾄ、6-25 ﾌﾟﾚｺｰﾄ Bolt, 6-25 Pre-coated	2	2	
7-27	3C8-05213-0	ｽﾛｯﾄﾙﾘﾐｯﾀｱｰﾑ Arm, Throttle Limiter Arm	1	1	
7-28	910114-0625	ﾎﾞﾙﾄ Bolt	1	1	F ﾀｲﾌﾟ for “F” Type
7-29	940103-0600	ﾜｯｼｬ Washer	2	2	

スロットル
Fig.7 THROTTLE

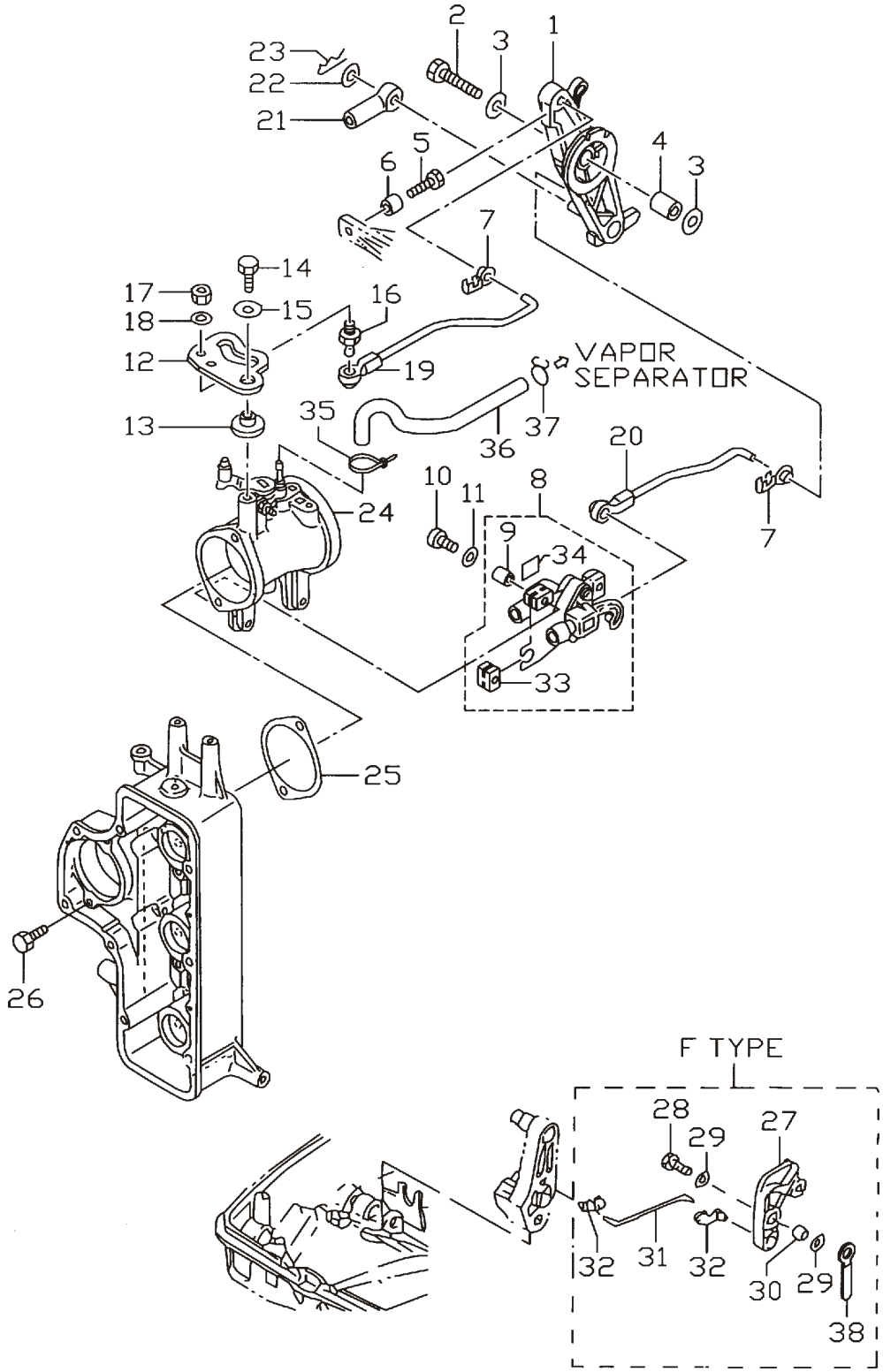

見出番号 Ref. No.	部品番号 Part No.	部　品　名 Description	個数 Q'ty D 50 B	個数 Q'ty D 40 B	備　考 Remarks
7-30	353-76079-0	ｶﾗｰ、6.2-9-9.3 Collar, 6.2-9-9.3	1	1	
7-31	3C8-05221-0	ｽﾛｯﾄﾙﾘﾐｯﾀﾛｯﾄﾞ、3.5-56 Throttle Limiter Rod, 3.5-56	1	1	F ﾀｲﾌﾟ for “F” Type
7-32	3C8-05223-0	ﾛｯﾄﾞｽﾅｯﾌﾟ、3.5-4 Rod Snap, 3.5-4	2	2	
7-33	3T5-10107-0	ﾗﾊﾞｰﾏｳﾝﾄ Rubber Mount	3	3	
7-34	3T5-72195-0	TPS ﾃﾞｶﾙ TPS Decal	1	1	
7-35	3T5-84398-0	ﾘｰﾄﾞﾜｲﾔﾊﾞﾝﾄﾞ、104 Lead Wire Band, 104	1	1	
7-36	98AB-3-0310	ｺﾞﾑﾎｰｽ Rubber Hose	1	1	
7-37	338-01133-0	ｸﾘｯﾌﾟ、φ7 Clip, φ7	1	1	
7-38	309-06972-0	ｸﾗﾝﾌﾟ、6.5-47.5P Clamp, 6.5-47.5P	1	1	F ﾀｲﾌﾟ for “F” Type

ﾃｨﾗﾊﾝﾄﾞﾙ (F ﾀｲﾌﾟ)
Fig.8 TILLER HANDLE (F Type)

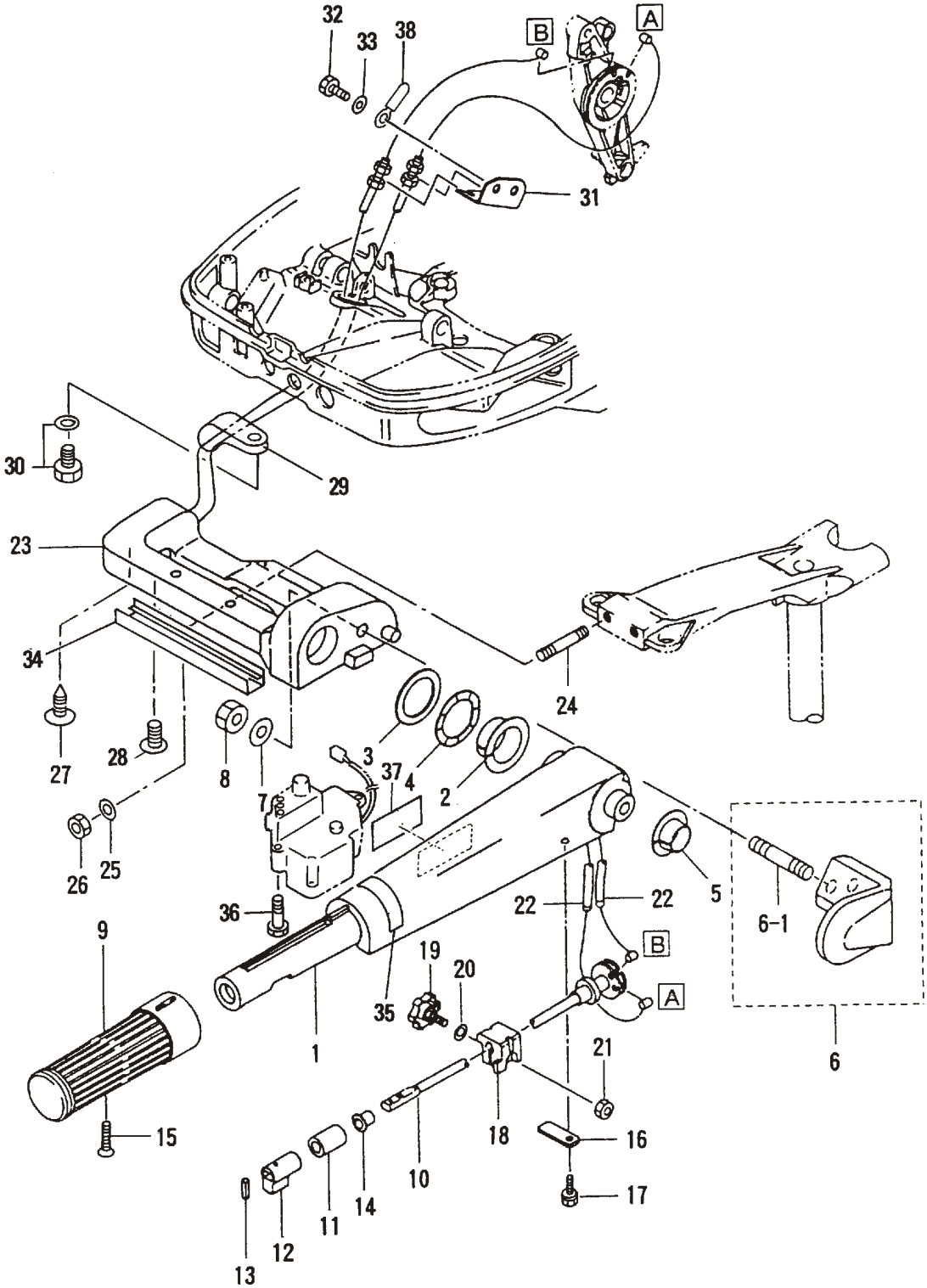

見出番号 Ref. No.	部品番号 Part No.	部　品　名 Description	個数 Q'ty D 50 B	個数 Q'ty D 40 B	備　考 Remarks
8-1	3C8Q63011-1	ﾃｨﾗﾊﾝﾄﾞﾙ Tiller Handle	1	1	ｽﾃｱﾘﾝｸﾞﾊﾝﾄﾞﾙ Steering Handle
8-2	3C8-63101-0	ﾃｨﾗﾊﾝﾄﾞﾙﾌﾞｯｼﾝｸﾞ A Tiller Handle Bushing “A”	1	1	
8-3	3B2-63108-0	ﾜｯｼｬ、30-45-1 Washer, 30-45-1	1	1	
8-4	3B2-63109-0	ｳｪｰﾌﾞﾜｯｼｬ、30-45-1.2 Wave Washer, 30-45-1.2	1	1	
8-5	3C8-63102-1	ﾃｨﾗﾊﾝﾄﾞﾙﾌﾞｯｼﾝｸﾞ B Tiller Handle Bushing “B”	1	1	
8-6	3C8Q63027-0	ﾃｨﾗﾊﾝﾄﾞﾙﾎﾙﾀﾞｱｯｼ Tiller Handle Holder Ass'y	1	1	
8-6-1	915313-1022	ﾀﾞｯﾄﾞﾎﾞﾙﾄ ＊ Stud Bolt	1	1	
8-7	940113-1000	ﾜｯｼｬ Washer	1	1	
8-8	930103-1000	ﾅｯﾄ Nut	1	1	
8-9	398-63012-0	ｸﾞﾘｯﾌﾟ Grip	1	1	
8-10	3C8-63041-1	ｽﾛｯﾄﾙｼｬﾌﾄ Throttle Shaft	1	1	
8-11	345-63048-0	ｽﾛｯﾄﾙｼｬﾌﾄﾀﾞﾝﾊﾟ Throttle Shaft Damper	1	1	
8-12	398-63053-0	ｽﾛｯﾄﾙｼｬﾌﾄｽﾍﾟｰｻ Throttle Shaft Spacer	1	1	
8-13	951403-0310	ｽﾌﾟﾘﾝｸﾞﾋﾟﾝ、3-10 Spring Pin, 3-10	1	1	
8-14	350-63046-0	ﾌﾞｯｼﾝｸﾞ、8.4-10-11 Bushing, 8.4-10-11	1	1	
8-15	921803-0525	ｽｸﾘｭ Screw	1	1	
8-16	3C8-63063-0	ｽﾛｯﾄﾙｼｬﾌﾄｻﾎﾟｰﾀ Throttle Shaft Supporter	1	1	
8-17	910113-5612	ﾎﾞﾙﾄ Bolt	1	1	
8-18	3B2-63035-1	ﾌﾘｸｼｮﾝﾋﾟｰｽ Friction Piece	1	1	
8-19	3B2-63034-0	ｱｼﾞｬｽﾄｽｸﾘｭ Adjusting Screw	1	1	
8-20	940103-0600	ﾜｯｼｬ Washer	1	1	or 940113-0600
8-21	930103-0600	ﾅｯﾄ Nut	1	1	or 930113-0600
8-22	3C8-63600-0	ｽﾛｯﾄﾙﾜｲﾔ Throttle Cable	2	2	
8-23	3C8Q62001-2	ｽﾃｱﾘﾝｸﾞﾌﾞﾗｹｯﾄ Steering Bracket	1	1	
8-24	915213-0845	ｽﾀｯﾄﾞﾎﾞﾙﾄ Stud Bolt	2	2	
8-25	940103-0800	ﾜｯｼｬ Washer	2	2	or 940113-0800
8-26	930403-0800	ﾅｲﾛﾝﾅｯﾄ、8-P1.25 Nylon Nut, 8-P1.25	2	2	
8-27	3C8-63607-0	ｽﾛｯﾄﾙﾜｲﾔｸﾘｯﾌﾟ Throttle Cable Clip	1	1	
8-28	921903-0625	ｽｸﾘｭ Screw	2	2	
8-29	345-06915-0	ｸﾗﾝﾌﾟ、6.5-14L Clamp, 6.5-14L	1	1	

ﾃｨﾗﾊﾝﾄﾞﾙ (F ﾀｲﾌﾟ)
Fig.8 TILLER HANDLE (F Type)

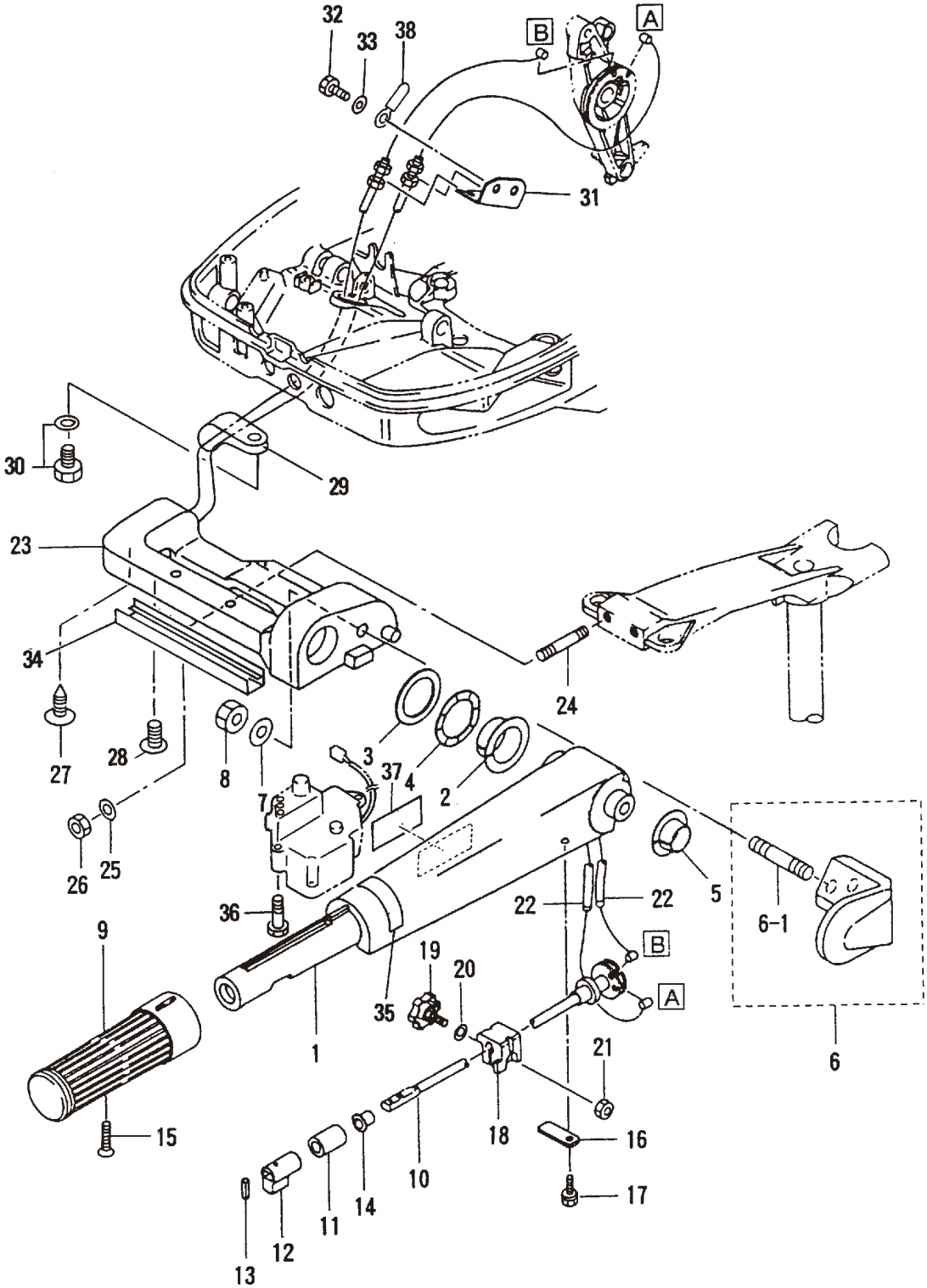

見出番号 Ref. No.	部品番号 Part No.	部　品　名 Description	個数 Q'ty D 50 B	個数 Q'ty D 40 B	備　考 Remarks
8-30	910103-5612	ﾎﾞﾙﾄ Bolt	1	1	or 910113-5612
8-31	3C8-63508-0	ｽﾛｯﾄﾙﾜｲﾔﾌﾞﾗｹｯﾄ Throttle Cable Bracket	1	1	
8-32	910114-0614	ﾎﾞﾙﾄ Bolt	2	2	
8-33	940103-0600	ﾜｯｼｬ Washer	2	2	or 940113-0600
8-34	3T5-62004-0	ｺｰﾄﾞﾎﾙﾀ Cord Holder	1	1	
8-35	3T5-72019-0	ｽﾛｯﾄﾙﾃﾞｶﾙ Throttle Decal	1	1	
8-36	910103-6625	ﾎﾞﾙﾄ Bolt	2	2	
8-37	3T5-84335-0	ﾒｲﾝｽｲｯﾁﾃﾞｶﾙ Main Switch Decal	1	1	
8-38	309-06972-0	ｸﾗﾝﾌﾟ、6.5-47.5P Clamp, 6.5-47.5P	1	1	

スイッチボックス（F タイプ）
Fig.9 SWITCH BOX (F Type)

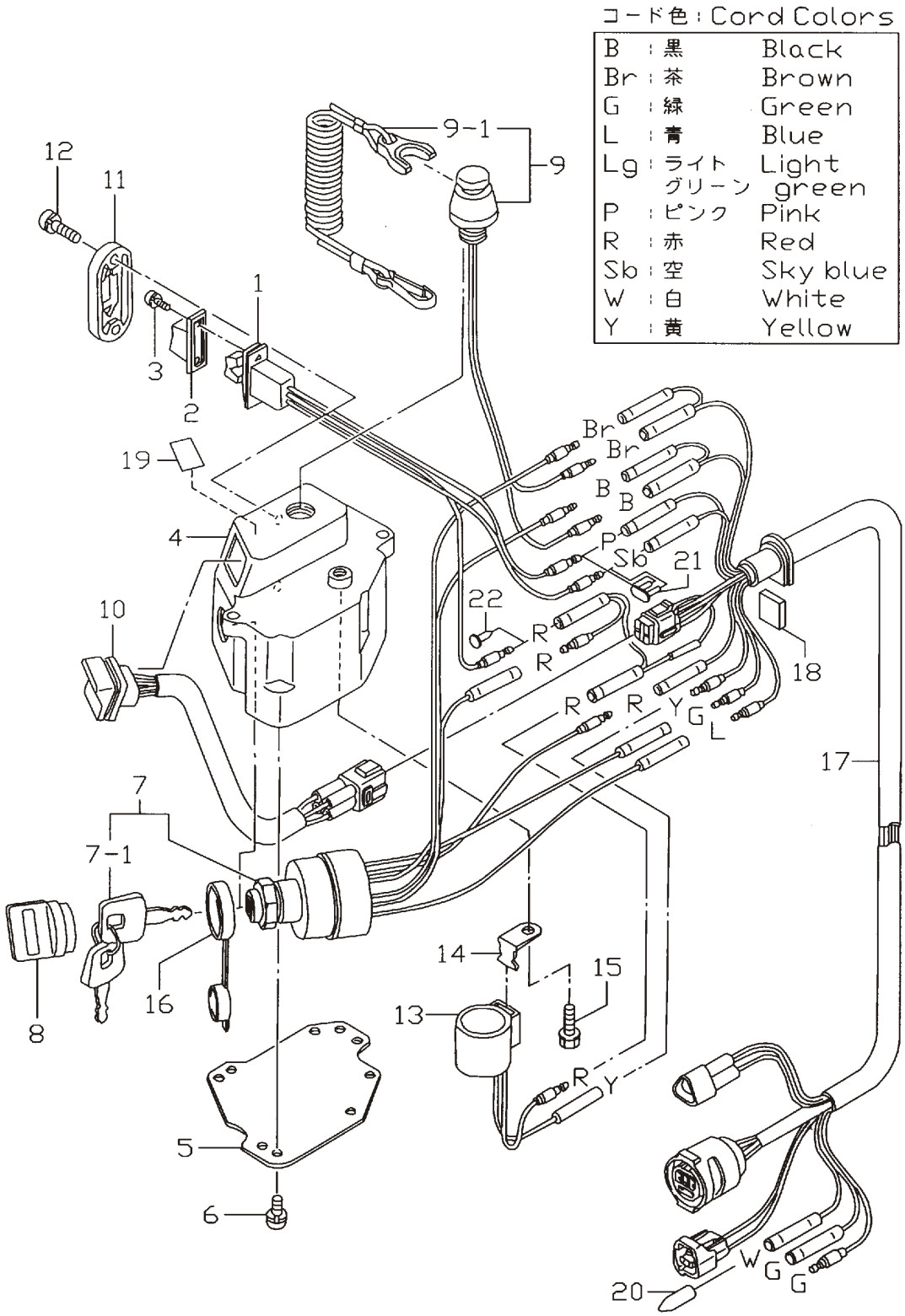

見出番号 Ref. No.	部品番号 Part No.	部　品　名 Description	個数 Q'ty D 50 B	個数 Q'ty D 40 B	備　考 Remarks
9-1	3T5-72570-0	PTT ｽｲｯﾁ PTT Switch	1	1	
9-2	353-72591-0	PTT ｽｲｯﾁｶﾊﾞｰ PTT Switch Cover	1	1	PTT ﾀｲﾌﾟ for "PTT" Type
9-3	921503-5206	ｽｸﾘｭ Screw	2	2	
9-4	3T5Q76032-0	ｽｲｯﾁﾎﾞｯｸｽ Switch Box	1	1	
9-5	3T5-76230-0	ｽｲｯﾁﾎﾞｯｸｽｶﾊﾞｰ Switch Box Cover	1	1	
9-6	921503-5510	ｽｸﾘｭ Screw	4	4	
9-7	385-76020-1	ﾒｲﾝｽｲｯﾁ Main Switch	1	1	
9-7-1	353-76203-1	ﾒｲﾝｽｲｯﾁｷｰ、(No. 301) ＊ Main Switch Key (No. 301)	1set	1set	
	353-76203-2	ﾒｲﾝｽｲｯﾁｷｰ、(No. 302) ＊ Main Switch Key (No. 302)	1set	1set	
	353-76203-3	ﾒｲﾝｽｲｯﾁｷｰ、(No. 303) ＊ Main Switch Key (No. 303)	1set	1set	
9-8	385-76205-1	ﾒｲﾝｽｲｯﾁｷｰｶﾊﾞｰ Main Switch Key Cover	2	2	
9-9	3T5-06830-0	ｽﾄｯﾌﾟｽｲｯﾁ Lanyard Stop Switch	1	1	
9-9-1	353-06821-0	ｽﾄｯﾌﾟｽｲｯﾁﾛｯｸ (ﾛｰﾌﾟ付) ＊ Stop Switch Lanyard	1	1	
9-10	3T5-71040-0	ﾜｰﾆﾝｸﾞﾗﾝﾌﾟ Warning Lamp	1	1	
9-11	3T5-72618-0	PTT ｽｲｯﾁｶﾊﾞｰ PTT Switch Cover	1	1	PTT ﾀｲﾌﾟ for "PTT" Type
	3T5-72611-0	PTT ｽｲｯﾁｶﾊﾞｰ B PTT Switch Cover "B"	1	1	EFO ﾀｲﾌﾟ for "EFO" Type
9-12	921503-5512	ｽｸﾘｭ Screw	2	2	
9-13	3C8-76171-0	ｵｰﾊﾞｰﾋｰﾄﾌﾞｻﾞｰ Over-Heat Buzzer	1	1	
9-14	3T5-76174-0	ｵｰﾊﾞｰﾋｰﾄﾌﾞｻﾞｰｽﾃｰ Over-Heat Buzzer Stay	1	1	
9-15	910103-6612	ﾎﾞﾙﾄ Bolt	1	1	
9-16	3T5-76022-0	ﾒｲﾝｽｲｯﾁｷｬｯﾌﾟ Main Switch Cap	1	1	
9-17	3T5-76119-0	ｺｰﾄﾞｱｯｼﾞ C Cord Ass'y "C"	1	1	L=1000
9-18	3B7-76035-0	ｽｲｯﾁﾎﾞｯｸｽｸﾞﾛﾒｯﾄ Switch Box Grommet	1	1	
9-19	3T5-72198-0	ﾜｰﾆﾝｸﾞﾃﾞｶﾙ Warning Decal	1	1	
9-20	3T5-76037-0	ｹｰﾌﾞﾙﾀｰﾐﾅﾙﾌﾟﾗｸﾞ Cable Terminal Plug	1	1	
9-21	353-76037-0	ｹｰﾌﾞﾙﾀｰﾐﾅﾙﾌﾟﾗｸﾞ Cable Terminal Plug	1	1	EFO ﾀｲﾌﾟ for "EFO" Type
9-22	3A3-76037-0	ｹｰﾌﾞﾙﾀｰﾐﾅﾙﾌﾟﾗｸﾞ Cable Terminal Plug	1	1	

マグネト
Fig.10 MAGNETO

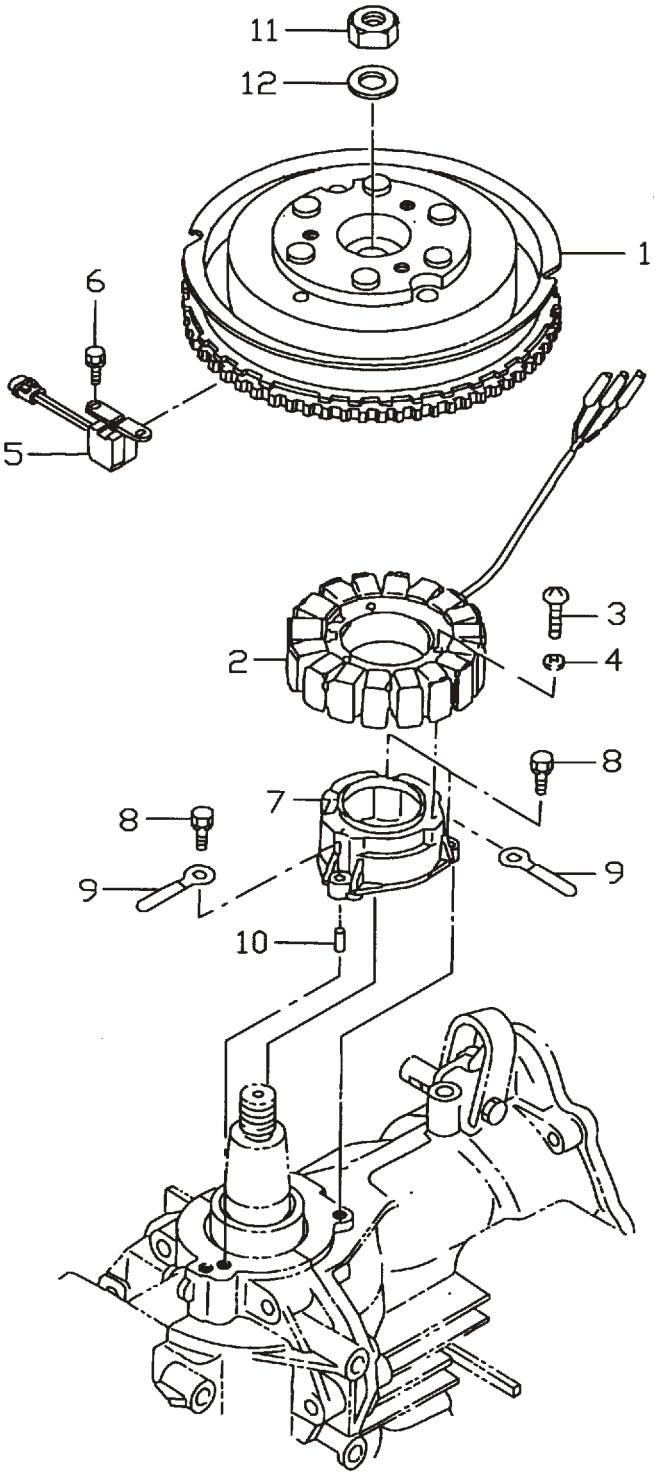

見出番号 Ref. No.	部品番号 Part No.	部　品　名 Description	個数 Q'ty D 50 B	D 40 B	備　考 Remarks
10-1	3T5-06191-0	ﾌﾗｲﾎｲﾙ Flywheel	1	1	F4T601-71
10-2	3Y9-06123-0	ｵﾙﾀﾈｰﾀ Alternator	1	1	# 011601XC～
10-3	921503-0635	ｽｸﾘｭ Screw	3	3	
10-4	941303-0600	ｽﾌﾟﾘﾝｸﾞﾜｯｼｬ Spring Washer	3	3	
10-5	3T5-06145-0	ﾋﾟｯｸｱｯﾌﾟｺｲﾙ Pick-UP Coil	1	1	ｸﾗﾝｸﾎﾟｼﾞｼｮﾝｾﾝｻ Crank Position Sensor
10-6	910103-6512	ﾎﾞﾙﾄ Bolt	2	2	
10-7	3T5-06008-1	ｺｲﾙﾌﾞﾗｹｯﾄ Coil Bracket	1	1	
10-8	910103-7625	ﾎﾞﾙﾄ Bolt	3	3	
10-9	309-06972-0	ｸﾗﾝﾌﾟ、6.5-47.5P Clamp, 6.5-47.5P	2	2	
10-10	334-65012-0	ﾀﾞｳｴﾙﾋﾟﾝ、4-10 Dowel Pin, 4-10	2	2	
10-11	353-00132-0	ﾅｯﾄ、18-P1.5 Nut, 18-P1.5	1	1	
10-12	353-00133-0	ﾜｯｼｬ、19-34-3 Washer, 19-34-3	1	1	

エレクトリックパーツ (ECU & ダイヤグラム)

Fig.11 ELECTRIC PARTS (ECU & DIAGRAM)

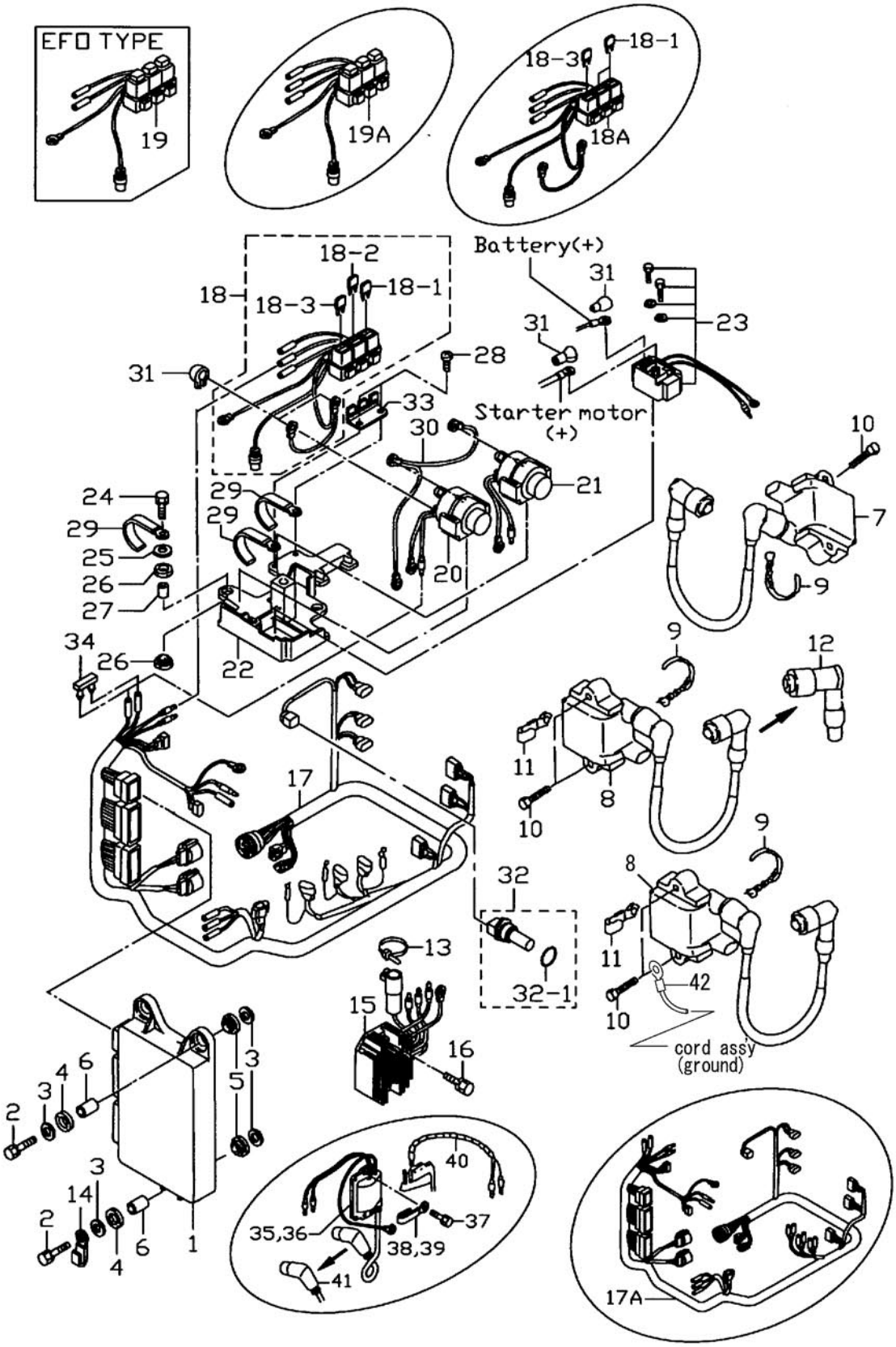

見出番号 Ref. No.	部品番号 Part No.	部　品　名 Description	個数 Q'ty D 50 B	個数 Q'ty D 40 B	備　考 Remarks
11-1	3Z5-06401-0	ECU 50 ECU 50	1	-	Label 3Z503AA # 011601XC～
	3Z4-06401-0	ECU 40 ECU 40	-	1	Label 3Z403AA # 011601XC～
	3T5-06401-0	ECU 50 ECU 50	(1)	-	Label 3T502AF ～# 006249
	3T4-06401-0	ECU 40 ECU 40	-	(1)	Label 3T402AC ～# 006249
11-2	910103-6630	ﾎﾞﾙﾄ Bolt	3	3	
11-3	346-67115-0	ﾜｯｼｬ、6.5-21-1 Washer, 6.5-21-1	6	6	
11-4	346-67113-0	ﾗﾊﾞｰﾏｳﾝﾄ、8.5-14-2.5 Rubber Mount, 8.5-14-2.5	3	3	
11-5	3B7-06920-0	ﾗﾊﾞｰﾏｳﾝﾄ、8.5-14-2.5 Rubber Mount, 8.5-14-2.5	3	3	
11-6	3T5-67114-0	ｽﾍﾟｰｻ、6.2-9-16.6 Spacer, 6.2-9-16.6	3	3	
11-7	3Z5-06469-0	ｲｸﾞﾆｯｼｮﾝｺｲﾙ、# 1 Ignition Coil, # 1	1	1	# 011601XC～
11-8	3Z5-06470-0	ｲｸﾞﾆｯｼｮﾝｺｲﾙ、# 2 & # 3 Ignition Coil, # 2 & # 3	2	2	# 011601XC～
11-9	369-84398-0	ﾘｰﾄﾞﾜｲﾔﾊﾞﾝﾄﾞ、158 Lead Wire Band, 158	3	3	
11-10	910103-7635	ﾎﾞﾙﾄ Bolt	6	6	
11-11	3T4-06972-0	ｸﾗﾝﾌﾟ、6.5-87P Clamp, 6.5-87P	2	2	
11-12	3H6-06999-0	ﾌﾟﾗｸﾞｷｬｯﾌﾟ（ﾚｼﾞｽﾀﾝｽ） ＊ Plug Cap (with Resistance)	3	3	
11-13	3T5-84398-0	ﾘｰﾄﾞﾜｲﾔﾊﾞﾝﾄﾞ、 104 Lead Wire Band, 104	1	1	
11-14	309-06972-0	ｸﾗﾝﾌﾟ、6.5-47.5P Clamp, 6.5-47.5P	1	1	
11-15	3Z5-76060-0	ﾚｸﾁﾌｧｲﾔ Rectifier	1	1	# 033649XD～
11-16	910103-5620	ﾎﾞﾙﾄ Bolt	2	2	or 910113-5620
11-17	3Z5-76110-0	ｺｰﾄﾞｱｯｼ A Cord Ass'y "A"	1	1	# 011601XC～
11-17A	3T5-76110-0	ｺｰﾄﾞｱｯｼ A Cord Ass'y "A"	(1)	(1)	～ # 006249XC
11-18	3Y9-76062-0	ﾋｭｰｽﾞﾎﾙﾀﾞ（PTT ﾀｲﾌﾟ） Fuse Holder (PTT type)	1	1	# 011601XC～
11-18A	3T9-76062-0	ﾋｭｰｽﾞﾎﾙﾀﾞ（PTT ﾀｲﾌﾟ） Fuse Holder (PTT type)	(1)	(1)	～ # 006249XC
11-18-1	3T5-76246-0	ﾋｭｰｽﾞ、15A ＊ Fuse, 15A	1	1	
11-18-2	3T5-76248-0	ﾋｭｰｽﾞ、25A ＊ Fuse, 25A	1	1	# 011601XC～
11-18-3	3T5-76249-0	ﾋｭｰｽﾞ、30A ＊ Fuse, 30A	1	1	
11-19	3Z5-76066-0	ﾋｭｰｽﾞﾎﾙﾀﾞ B（EFOﾀｲﾌﾟ） Fuse Holder "B" (EFO type)	1	1	# 011601XC～
11-19A	3T5-76066-0	ﾋｭｰｽﾞﾎﾙﾀﾞ B（EFOﾀｲﾌﾟ） Fuse Holder "B" (EFO type)	(1)	(1)	～ # 006249XC
11-20	3C8-72580-0	PTT ｿﾚﾉｲﾄﾞｽｲｯﾁ A PTT Solenoid Switch "A"	1	1	UP, for "PTT" Type
11-21	3C8-72581-0	PTT ｿﾚﾉｲﾄﾞｽｲｯﾁ B PTT Solenoid Switch "B"	1	1	DN, for "PTT" Type

エレクトリックパーツ (ECU & ダイヤグラム)
Fig.11 ELECTRIC PARTS (ECU & DIAGRAM)

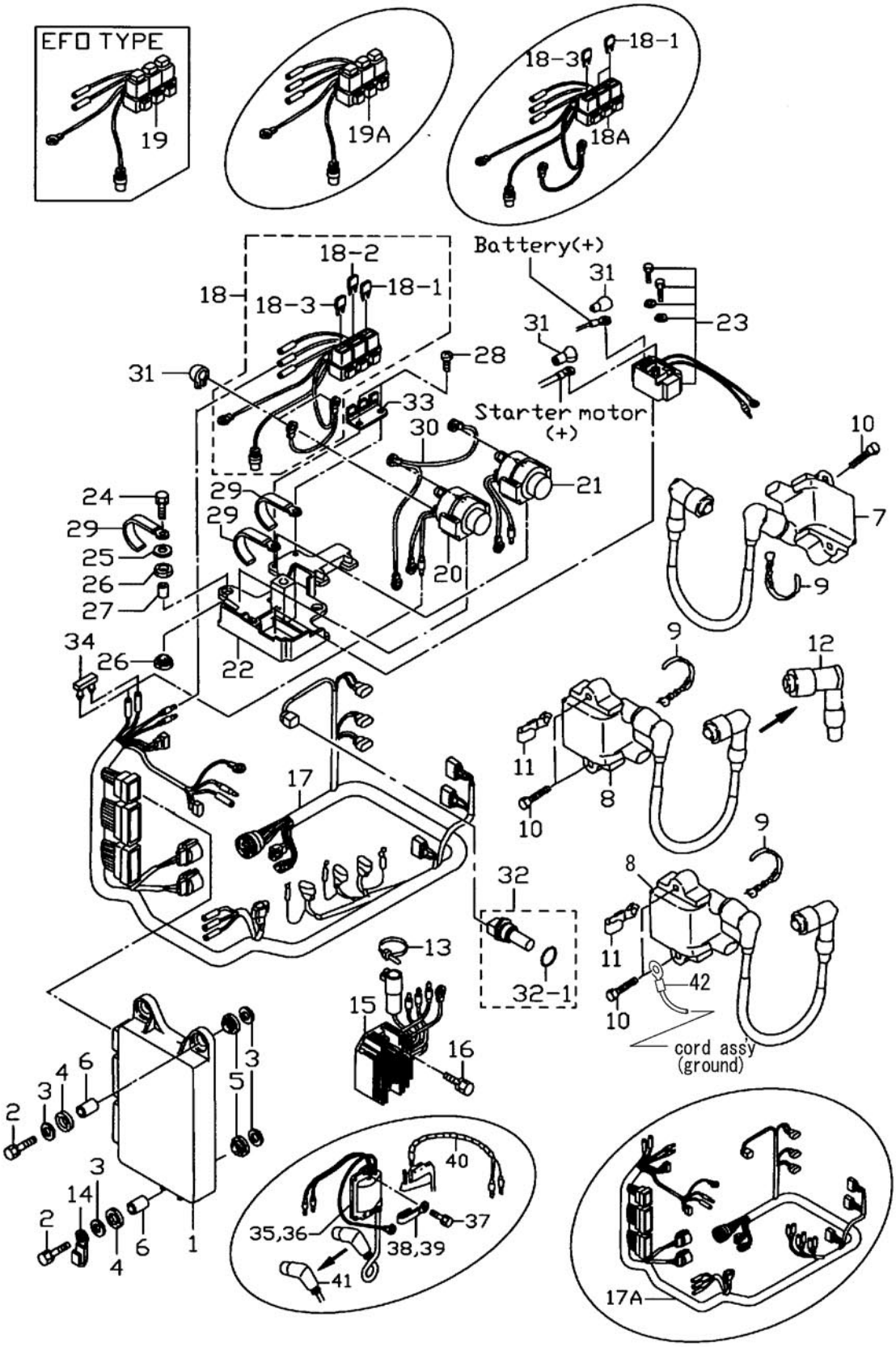

見出番号 Ref. No.	部品番号 Part No.	部　品　名 Description	個数 Q'ty D 50 B	個数 Q'ty D 40 B	備　考 Remarks
11-22	3T5-72585-0	ｿﾚﾉｲﾄﾞｽｲｯﾁﾌﾞﾗｹｯﾄ Solenoid Switch Bracket	1	1	
11-23	3H8-76040-0	ｽﾀｰﾀｿﾚﾉｲﾄﾞ Starter Solenoid	1	1	
11-24	910103-6625	ﾎﾞﾙﾄ Bolt	3	3	
11-25	3R0-66308-0	ﾜｯｼｬ、6-16-1.5 Washer, 6-16-1.5	1	1	
11-26	3F3-06920-0	ﾗﾊﾞｰﾏｳﾝﾄ、9-12-2 Rubber Mount, 9-12-2	6	6	
11-27	3T5-76079-0	ｽﾍﾟｰｻ、6.2-9-10.7 Spacer, 6.2-9-10.7	3	3	
11-28	3T5-06437-0	ﾀｯﾋﾟﾝｸﾞｽｸﾘｭ、6-16 Tapping Screw, 6-16	2	2	
11-29	3T4-06972-0	ｸﾗﾝﾌﾟ、6.5-87P Clamp, 6.5-87P	4	4	
11-30	3T5-76142-0	ｱｰｽﾜｲﾔ Ground Cable	1	1	PTT ﾀｲﾌﾟ for “PTT” Type
11-31	3A3-76145-0	ﾀｰﾐﾅﾙｷｬｯﾌﾟ terminal Cap	4	4	
11-32	3Y9-72514-0	ｳｫｰﾀﾃﾝﾌﾟｾﾝｻ Water Temperature Sensor	1	1	# 011601XC～
	3T4-72514-0	ｳｫｰﾀﾃﾝﾌﾟｾﾝｻ Water Temperature Sensor	(1)	(1)	～ # 006249XC
11-32-1	3G9-66136-0	O ﾘﾝｸﾞ、2.0-10 ＊ O-Ring, 2.0-10	1	1	# 011601XC～
	3T5-72509-0	O ﾘﾝｸﾞ、1.9-9.8 ＊ O-Ring, 1.9-9.8	(1)	(1)	～ # 006249XC
11-33	3T9-76064-0	ﾋｭｰｽﾞﾎﾙﾀﾞﾌﾞﾗｹｯﾄ Fuse Holder Bracket	1	1	
11-34	353-76037-0	ｹｰﾌﾞﾙﾀｰﾐﾅﾙﾌﾟﾗｸﾞ Cable Terminal Plug	1	1	
11-35	3T5-06171-1	ｲｸﾞﾆｯｼｮﾝｺｲﾙ、# 1 Ignition Coil, # 1	(1)	(1)	～ # 006249XC
11-36	3T5-06173-1	ｲｸﾞﾆｯｼｮﾝｺｲﾙ、# 2 & # 3 Ignition Coil, # 2 & # 3	(2)	(2)	～ # 006249XC
11-37	910103-6625	ﾎﾞﾙﾄ Bolt	(6)	(6)	～ # 006249XC
11-38	309-06972-0	ｸﾗﾝﾌﾟ、6.5-47.5P Clamp, 6.5-47.5P	(2)	(2)	Ignition Coil, # 1 & # 3 ～ # 006249XC
11-39	3T4-06972-0	ｸﾗﾝﾌﾟ、6.5-87P Clamp, 6.5-87P	(1)	(1)	Ignition Coil, # 2 ～ # 006249XC
11-40	3B7-63608-0	ｽﾊﾟｲﾗﾙﾁｭｰﾌﾞﾌﾟﾛﾃｸﾀ Spiral Tube protector	(1)	(1)	Ignition Coil, # 1 ～ # 006249XC
11-41	3T5-06921-0	ﾌﾟﾗｸﾞｷｬｯﾌﾟ（ﾚｼﾞｽﾀﾝｽ） Plug Cap (with Resistance)	(3)	(3)	～ # 006249XC
11-42	3Y9-76142-0	ｱｰｽﾜｲﾔ Ground Cable	1	1	L=400

エレクトリックパーツ（スタータモータ）
Fig.12　ELECTRIC PARTS (STARTER MOTOR)

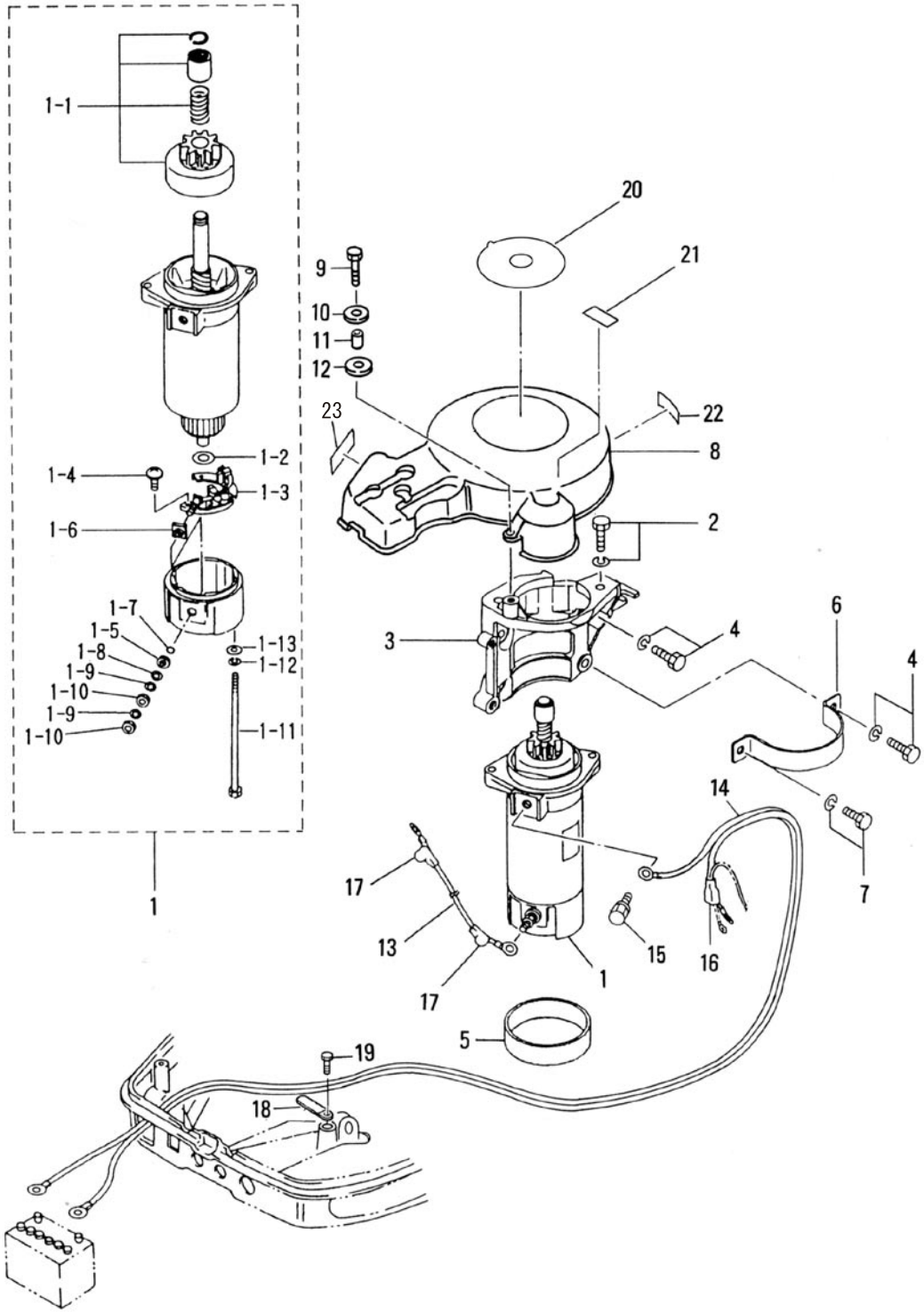

見出番号 Ref. No.	部品番号 Part No.	部　品　名 Description	個数 Q'ty D 50 B	個数 Q'ty D 40 B	備　考 Remarks
12-1	3C8-76010-1	ｽﾀｰﾀﾓｰﾀ Starter Motor	1	1	
12-1-1	3C8-76015-0	ﾋﾟﾆｵﾝ ＊ Pinion	1	1	
12-1-2	3C8-75015-0	ﾜｯｼｬ ＊ Washer	1	1	
12-1-3	3C8-75014-0	ﾌﾞﾗｼﾎﾙﾀﾞ ＊ Brush Holder	1	1	
12-1-4	921521-6408	ｽｸﾘｭ ＊ Screw	2	2	
12-1-5	3C8-75016-0	ﾌﾞｯｼﾝｸﾞ 1 ＊ Bushing 1	1	1	
12-1-6	3C8-75017-0	ﾌﾞｯｼﾝｸﾞ 2 ＊ Bushing 2	1	1	
12-1-7	3C8-75018-0	O ﾘﾝｸﾞ ＊ O-Ring	1	1	
12-1-8	940103-0600	ﾜｯｼｬ ＊ Washer	1	1	
12-1-9	941303-0600	ｽﾌﾟﾘﾝｸﾞﾜｯｼｬ ＊ Spring Washer	2	2	
12-1-10	930203-0600	ﾅｯﾄ ＊ Nut	2	2	
12-1-11	3C8-75019-0	ﾎﾞﾙﾄ ＊ Bolt	2	2	
12-1-12	941321-0500	ｽﾌﾟﾘﾝｸﾞﾜｯｼｬ ＊ Spring Washer	2	2	
12-1-13	940221-0500	ﾜｯｼｬ ＊ Washer	2	2	
12-2	910103-6825	ﾎﾞﾙﾄ Bolt	2	2	
12-3	3T5B05101-0	ｽﾀｰﾀﾓｰﾀﾌﾞﾗｹｯﾄ Starter Motor Bracket	1	1	
12-4	910103-6825	ﾎﾞﾙﾄ Bolt	4	4	
12-5	3C8-76007-0	ｽﾀｰﾀﾓｰﾀﾀﾞﾝﾊﾟ Starter Motor Damper	1	1	
12-6	3C8-76009-0	ｽﾀｰﾀﾓｰﾀﾊﾞﾝﾄﾞ Starter Motor Band	1	1	
12-7	910103-6820	ﾎﾞﾙﾄ Bolt	1	1	
12-8	3T5-06301-0	ﾘﾝｸﾞｷﾞﾔｶﾊﾞｰ Ring Gear Cover	1	1	
12-9	910113-0625	ﾎﾞﾙﾄ Bolt	3	3	
12-10	3R0-66308-0	ﾜｯｼｬ、6-16-1.5 Washer, 6-16-1.5	3	3	
12-11	353-76079-0	ｶﾗｰ、6.2-9-9.3 Collar, 6.2-9-9.3	3	3	
12-12	3B7-06305-0	ﾗﾊﾞｰﾏｳﾝﾄ、9-16-4.3 Rubber Mount, 9-16-4.3	3	3	
12-13	3R3-76141-0	ｽﾀｰﾀｺｰﾄﾞ Starter Cable	1	1	L=270
12-14	3B7-76120-0	ﾊﾞｯﾃﾘｺｰﾄﾞ Battery Cable	1	1	L=3000
12-15	910103-6612	ﾎﾞﾙﾄ Bolt	1	1	
12-16	3B7-76145-0	ﾀｰﾐﾅﾙｷｬｯﾌﾟ Terminal Cap	1	1	
12-17	3A3-76145-0	ﾀｰﾐﾅﾙｷｬｯﾌﾟ Terminal Cap	2	2	

エレクトリックパーツ（スタータモータ）
Fig.12　ELECTRIC PARTS (STARTER MOTOR)

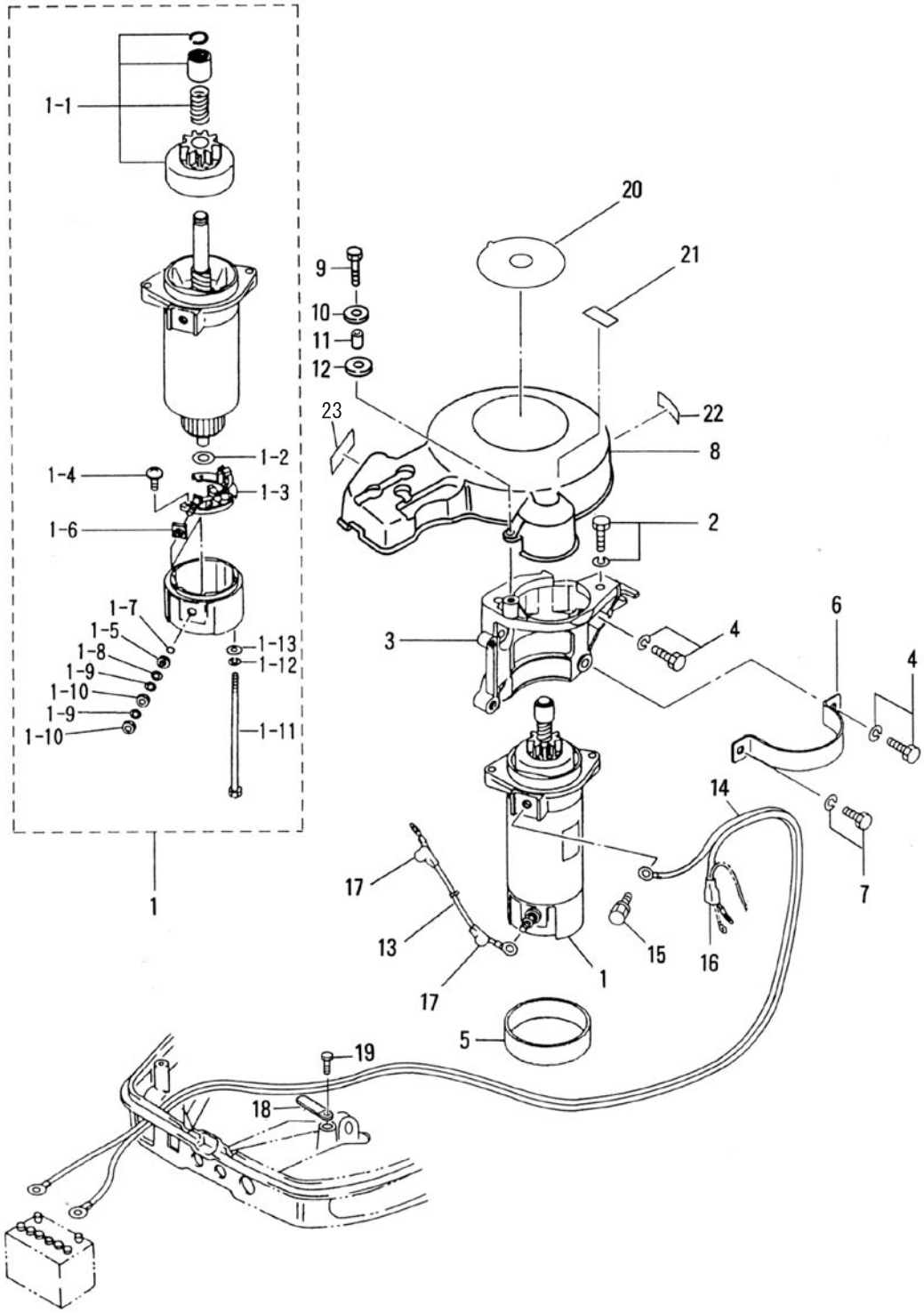

見出番号 Ref. No.	部品番号 Part No.	部　品　名 Description	個数 Q'ty D 50 B	個数 Q'ty D 40 B	備　考 Remarks
12-18	309-06972-0	ｸﾗﾝﾌﾟ、6.5-47.5P Clamp, 6.5-47.5P	1	1	
12-19	910113-0610	ﾎﾞﾙﾄ Bolt	1	1	
12-20	3R0-72181-0	ｺｰｼｮﾝﾃﾞｶﾙ (B) Caution Decal “B”	1	1	
12-21	3T5-72186-0	ﾌﾟﾚｯｼｬﾃﾞｶﾙ Pressure Decal	1	1	
12-22	3Y9-72026-0	ｽﾊﾟｰｸﾌﾟﾗｸﾞﾃﾞｶﾙ Spark Plug Decal	1	1	# 011601XC～
12-23	3T5-72194-0	ﾋｭｰｽﾞﾃﾞｶﾙ Fuse Decal	1	1	

エアコンプレッサ
Fig.13 AIR COMPRESSOR

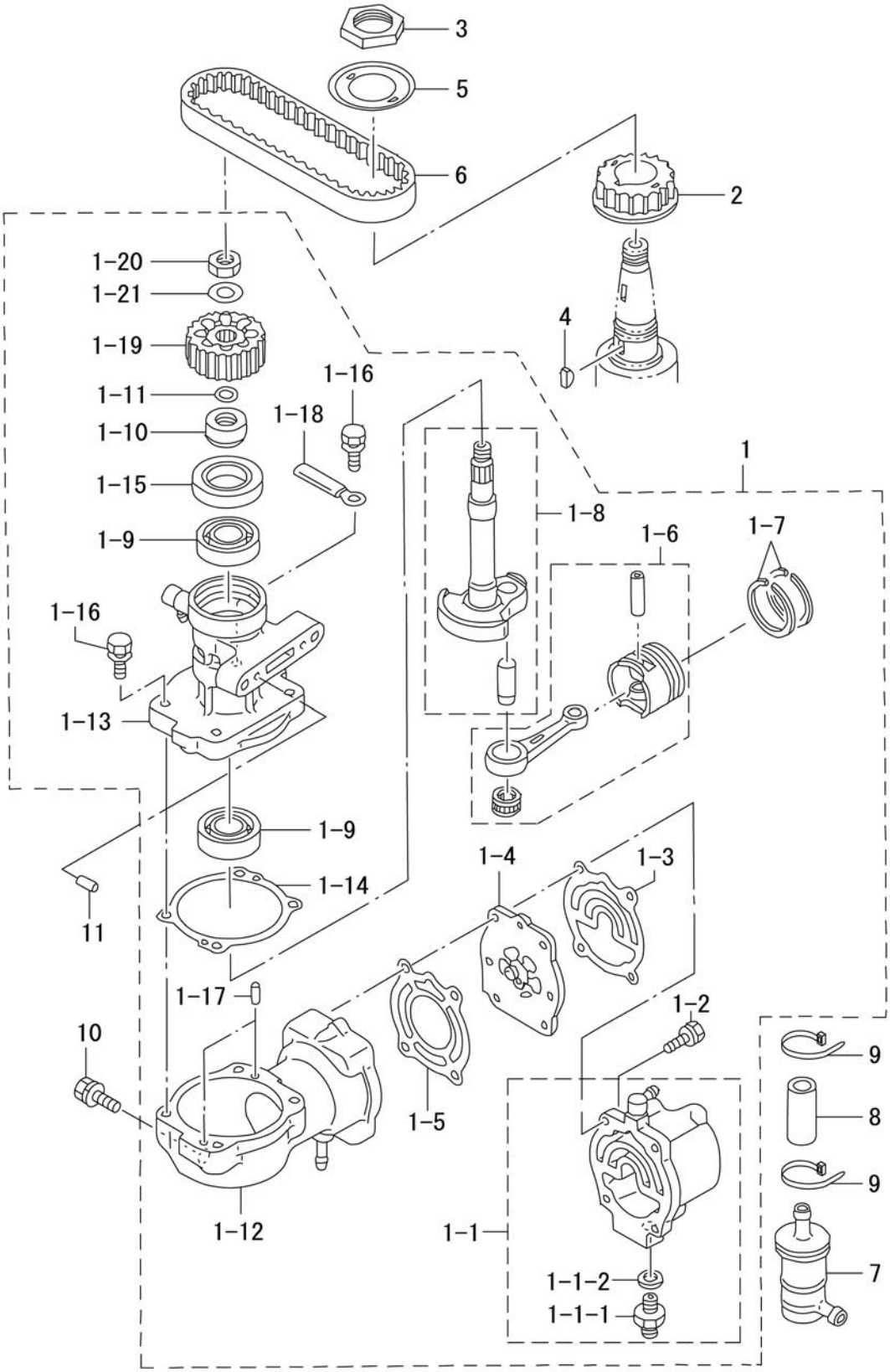

見出番号 Ref. No.	部品番号 Part No.	部　品　名 Description	個数 Q'ty D 50 B	D 40 B	備　考 Remarks
13-1	3T5B10000-3	ｴｱｺﾝﾌﾟﾚｯｻ Air Compressor	1	1	041783XD～
13-1-1	3Z5B10009-0	ｺﾝﾌﾟﾚｯｻﾍｯﾄﾞ（ﾆｯﾌﾟﾙ付） * Compressor Head (with Nipple)	1	1	041783XD～
13-1-1-1	3T5-04308-0	ﾎｰｽｼﾞｮｲﾝﾄｱﾀﾞﾌﾟﾀ ** Hose Joint Adapter	1	1	
13-1-1-2	3T5-04309-0	ﾒﾀﾙﾜｯｼｬ、10.2-17-2 ** Metal Washer, 10.2-17-2	1	1	
13-1-2	910124-7630	ﾎﾞﾙﾄ * Bolt	4	4	
13-1-3	3T5-10012-0	ｺﾝﾌﾟﾚｯｻﾍｯﾄﾞｶﾞｽｹｯﾄ * Compressor Head Gasket	1	1	
13-1-4	3T5-10010-0	ﾘｰﾄﾞﾊﾞﾙﾌﾞｱｯｼ * Reed Valve Ass'y	1	1	
13-1-5	3T5-10019-0	ﾊﾞﾙﾌﾞｼｰﾄｶﾞｽｹｯﾄ * Valve Seat Gasket	1	1	
13-1-6	3T5-87330-1	ﾋﾟｽﾄﾝ & ｺﾝﾛｯﾄﾞ * Piston & Connecting Rod	1	1	
13-1-7	3T5-10025-0	ﾋﾟｽﾄﾝﾘﾝｸﾞ * Piston Ring	2	2	
13-1-8	3T5-87331-0	ｸﾗﾝｸｼｬﾌﾄ * Crank Shaft	1	1	
13-1-9	9601-0-6203	ﾍﾞｱﾘﾝｸﾞ、6203 * Bearing, 6203	2	2	
13-1-10	3T5-10042-0	ｶﾗｰ、13.5-25-13 * Collar, 13.5-25-13	1	1	
13-1-11	3T5-10046-0	O ﾘﾝｸﾞ、1.9-13 * O-Ring, 1,9-13	1	1	
13-1-12	3Z5B10048-0	ｺﾝﾌﾟﾚｯｻｼﾘﾝﾀﾞ * Compressor Cylinder	1	1	
13-1-13	3T5B10051-0	ｺﾝﾌﾟﾚｯｻﾊｳｼﾞﾝｸﾞ * Compressor Housing	1	1	
13-1-14	3T5-10054-0	ｺﾝﾌﾟﾚｯｻﾊｳｼﾞﾝｸﾞｶﾞｽｹｯﾄ * Compressor Housing Gasket	1	1	
13-1-15	3T5-10041-0	ｵｲﾙｼｰﾙ、25-45-7 * Oil Seal, 25-45-7	1	1	
13-1-16	910113-5625	ﾎﾞﾙﾄ * Bolt	4	4	
13-1-17	334-65012-0	ﾀﾞｳｴﾙﾋﾟﾝ、4-10 * Dowel Pin, 4-10	2	2	
13-1-18	309-06972-0	ｸﾗﾝﾌﾟ、6.5-47.5P * Clamp, 6.5-47.5P	1	1	
13-1-19	3T5-10062-0	ﾄﾞﾘﾌﾞﾝﾌﾟｰﾘ * Driven Pulley	1	1	
13-1-20	309-00132-0	ﾄﾞﾘﾌﾞﾝﾌﾟｰﾘﾅｯﾄ、10-P1.25 * Driven Pulley Nut, 10-P1.25	1	1	
13-1-21	3B7-01116-0	ﾜｯｼｬ、10.5-20-3.2 * Washer, 10.5-20-3.2	1	1	
13-2	3T5-10060-0	ﾄﾞﾗｲﾌﾞﾌﾟｰﾘ Drive Pulley	1	1	
13-3	3T5-10068-0	ﾌﾟｰﾘﾅｯﾄ Pulley Nut	1	1	
13-4	3T5-10131-0	ﾄﾞﾗｲﾌﾞﾌﾟｰﾘｷｰ Drive Pulley Key	1	1	
13-5	3T5-10063-0	ﾍﾞﾙﾄｶﾞｲﾄﾞ Belt Guide	1	1	
13-6	3T5-10061-0	ﾄﾞﾗｲﾌﾞﾍﾞﾙﾄ Drive Belt	1	1	
13-7	3T5-10130-0	ｴｱﾌｨﾙﾀ Air Filter	1	1	

エアコンプレッサ
Fig.13 AIR COMPRESSOR

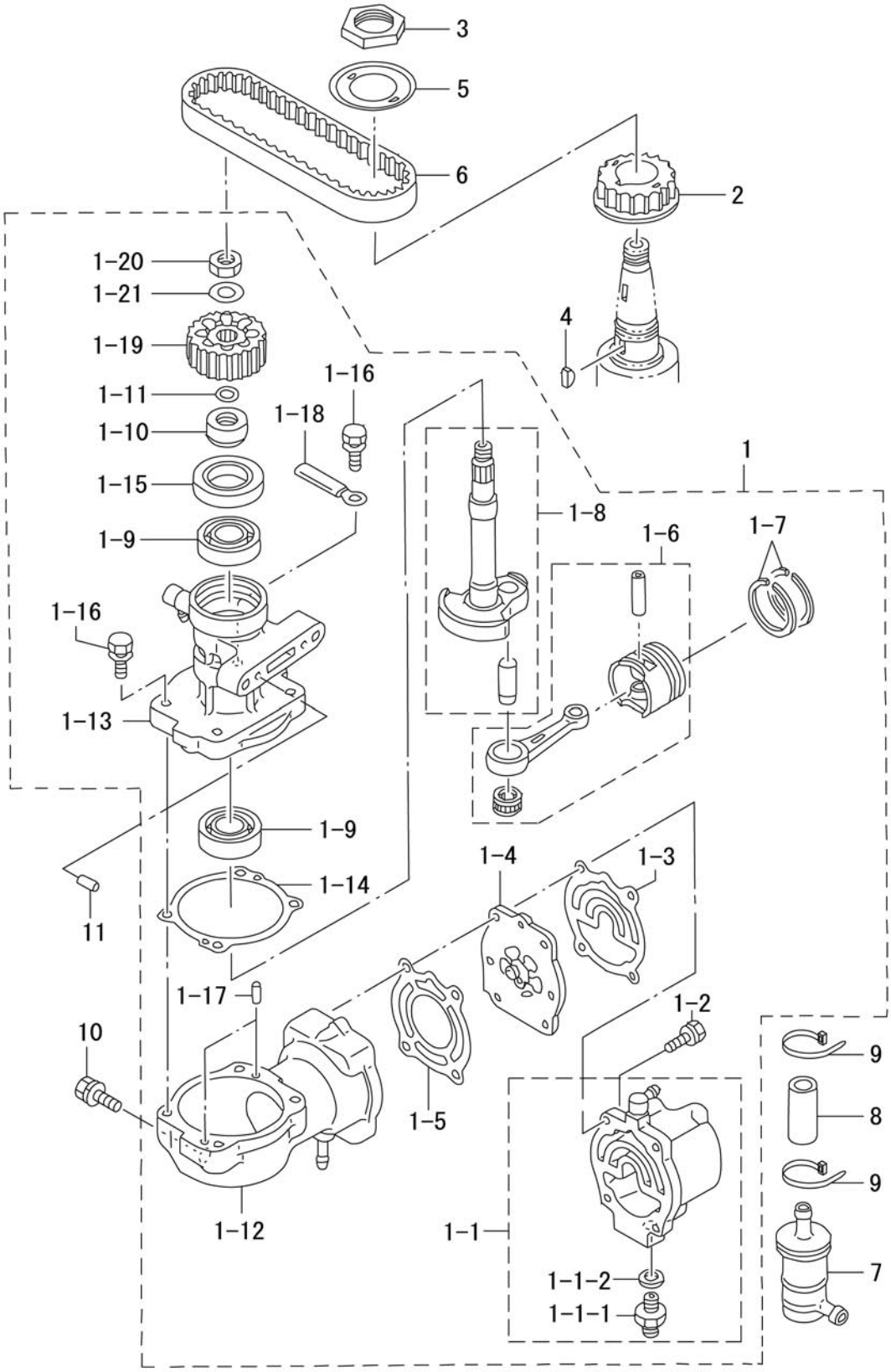

見出番号 Ref. No.	部品番号 Part No.	部　品　名 Description	個数 Q'ty D 50 B	個数 Q'ty D 40 B	備　考 Remarks
13-8	98AC-9-0055	ｴｱﾎｰｽ Air Hose	1	1	
13-9	3T5-84398-0	ﾘｰﾄﾞﾜｲﾔﾊﾞﾝﾄﾞ、104 Lead Wire Band, 104	2	2	
13-10	910103-7835	ﾎﾞﾙﾄ Bolt	3	3	
13-11	334-65012-0	ﾀﾞｳｴﾙﾋﾟﾝ、4-10 Dowel Pin, 4-10	2	2	

オイルポンプ
Fig.14 OIL PUMP

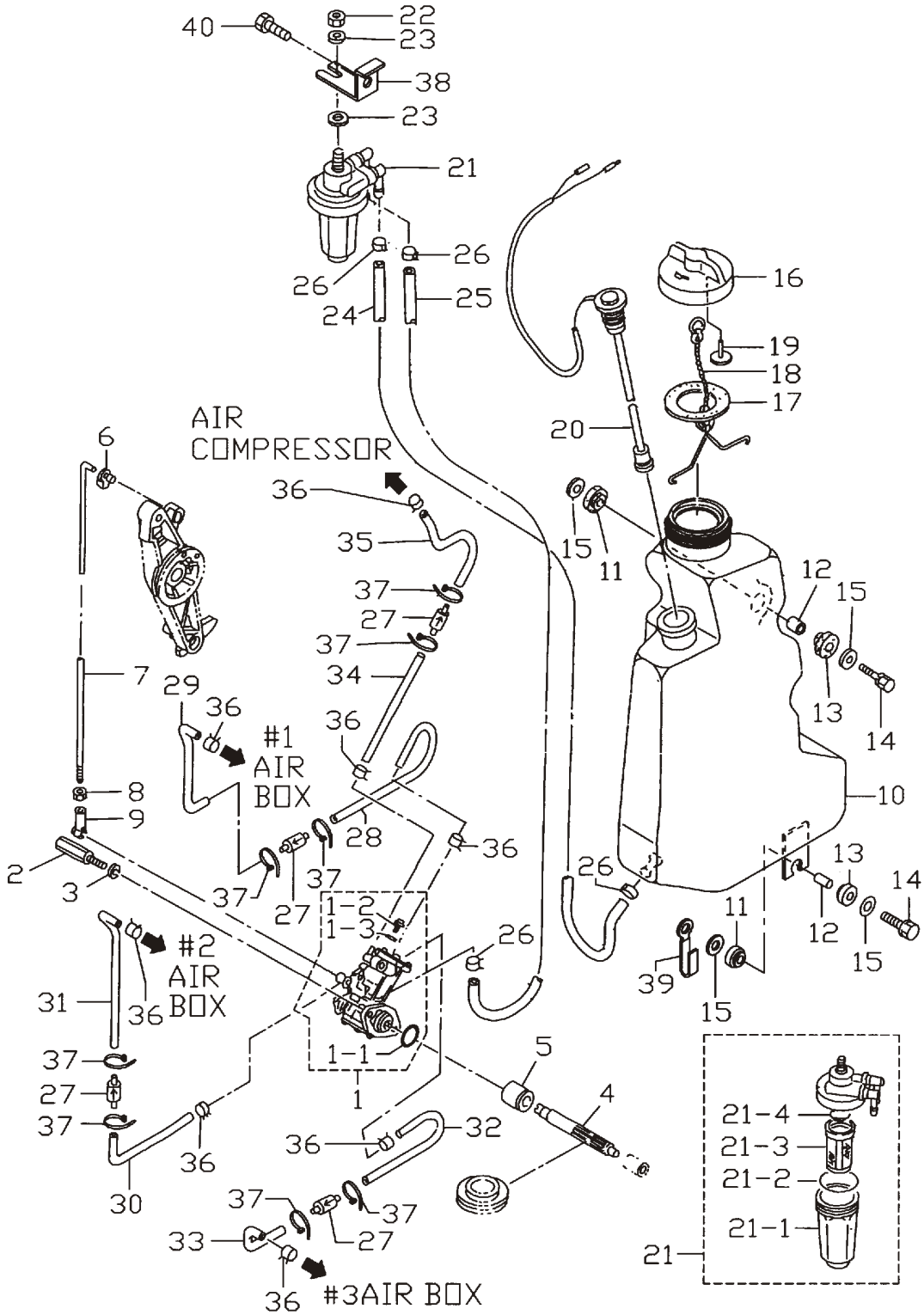

見出番号 Ref. No.	部品番号 Part No.	部　品　名 Description	個数 Q'ty D 50 B	個数 Q'ty D 40 B	備　考 Remarks
14-1	3T5-09000-0	ｵｲﾙﾎﾟﾝﾌﾟ Oil Pump	1	1	
14-1-1	3B7-09002-0	Ｏ ﾘﾝｸﾞ、1.6-19.2 ＊ O-Ring, 1.6-19.2	1	1	
14-1-2	3B7-09004-0	ｴｱﾍﾞﾝﾄﾎﾞﾙﾄ ＊ Air Vent Bolt	1	1	
14-1-3	3B7-09006-0	ﾜｯｼｬ ＊ Washer	1	1	
14-2	3C8-09050-0	ｵｲﾙﾎﾟﾝﾌﾟﾎﾞﾙﾄ Oil Pump Bolt	2	2	
14-3	941303-0600	ｽﾌﾟﾘﾝｸﾞﾜｯｼｬ Spring Washer	2	2	
14-4	3C8-09065-0	ｵｲﾙﾎﾟﾝﾌﾟﾄﾞﾘﾌﾞﾝｷﾞﾔ Oil Pump Driven Gear	1	1	
14-5	3C8-09069-0	ﾌﾞｯｼﾝｸﾞ、9-20-20.8 Bushing, 9-20-20.8	1	1	
14-6	3C8-63733-0	ﾛｯﾄﾞｽﾅｯﾌﾟ、5-3 Rod Snap, 5-3	1	1	
14-7	3C8-09053-1	ｵｲﾙﾎﾟﾝﾌﾟﾘﾝｸﾛｯﾄﾞ Oil Pump Link Rod	1	1	5-190
14-8	930103-0500	ﾅｯﾄ Nut	1	1	
14-9	3B7-05243-0	ﾎﾞｰﾙｼﾞｮｲﾝﾄｺﾈｸﾀ Ball Joint Connector	1	1	
14-10	3T5-71010-0	ｵｲﾙﾀﾝｸ Oil Tank	1	1	
14-11	3B7-06920-0	ﾗﾊﾞｰﾏｳﾝﾄ、8.5-14-2.5 Rubber Mount, 8.5-14-2.5	2	2	
14-12	346-67114-0	ｽﾍﾟｰｻ、6.2-9-15.7 Spacer, 6.2-9-15.7	2	2	
14-13	346-67113-0	ﾗﾊﾞｰﾏｳﾝﾄ、8.5-14-2.5 Rubber Mount, 8.5-14-2.5	2	2	
14-14	910103-6630	ﾎﾞﾙﾄ Bolt	2	2	
14-15	346-67115-0	ﾜｯｼｬ、6.5-21-1.0 Washer, 6.5-21-1.0	4	4	
14-16	3C8-71015-0	ｵｲﾙﾀﾝｸｷｬｯﾌﾟ Oil Tank Cap	1	1	
14-17	3C8-71016-0	ｶﾞｽｹｯﾄ、36-52-2 Gasket, 36-52-2	1	1	
14-18	3C8-71017-0	ﾀﾝｸｷｬｯﾌﾟﾌｯｸ Tank Cap Hook	1	1	
14-19	3C8-71018-0	ﾀﾝｸｷｬｯﾌﾟﾁｪｯｸﾊﾞﾙﾌﾞ Tank Cap Check Valve	1	1	
14-20	3T5-71020-0	ｵｲﾙﾚﾍﾞﾙｾﾝｻ Oil Level Sensor	1	1	
14-21	3C7-71030-0	ｵｲﾙﾌｨﾙﾀ Oil Filter	1	1	
14-21-1	3B7-02237-0	ｶｯﾌﾟ ＊ Cup	1	1	
14-21-2	3B7-02235-0	Ｏ ﾘﾝｸﾞ A ＊ O-Ring “A”	1	1	
14-21-3	3C7-71033-0	ﾌｨﾙﾀ ＊ Filter	1	1	
14-21-4	3B7-02236-0	Ｏ ﾘﾝｸﾞ B ＊ O-Ring “B”	1	1	
14-22	930113-0800	ﾅｯﾄ Nut	1	1	
14-23	940113-0800	ﾜｯｼｬ Washer	2	2	

オイルポンプ
Fig.14 OIL PUMP

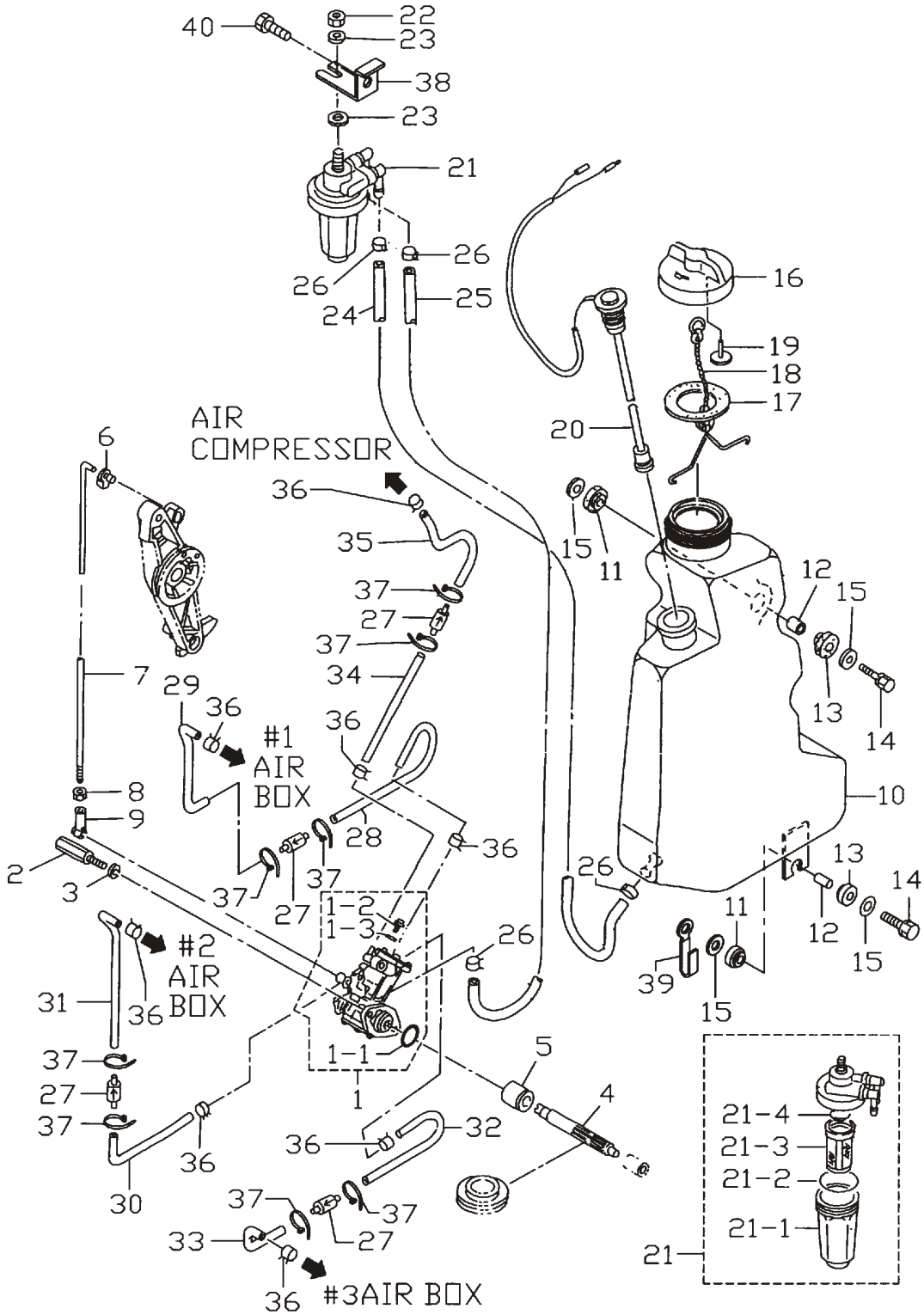

見出番号 Ref. No.	部品番号 Part No.	部　品　名 Description	個数 Q'ty D 50 B	個数 Q'ty D 40 B	備　考 Remarks
14-24	99AA-6-0570	ｵｲﾙﾊﾟｲﾌﾟ A Oil Pipe “A”	1	1	
14-25	99AA-6-0175	ｵｲﾙﾊﾟｲﾌﾟ B Oil Pipe “B”	1	1	
14-26	121-35143-0	ｸﾘｯﾌﾟ、φ9.5 Clip, φ9.5	4	4	
14-27	3B7-09075-1	ﾁｪｯｸﾊﾞﾙﾌﾞ Check Valve	4	4	
14-28	99AA-2-0140	ｵｲﾙﾊﾟｲﾌﾟ C Oil Pipe “C”	1	1	
14-29	99AA-2-0200	ｵｲﾙﾊﾟｲﾌﾟ D Oil Pipe “D”	1	1	
14-30	99AA-2-0200	ｵｲﾙﾊﾟｲﾌﾟ E Oil Pipe “E”	1	1	
14-31	99AA-2-0140	ｵｲﾙﾊﾟｲﾌﾟ F Oil Pipe “F”	1	1	
14-32	99AA-2-0200	ｵｲﾙﾊﾟｲﾌﾟ G Oil Pipe “G”	1	1	
14-33	99AA-2-0100	ｵｲﾙﾊﾟｲﾌﾟ H Oil Pipe “H”	1	1	
14-34	99AA-2-0120	ｵｲﾙﾊﾟｲﾌﾟ I Oil Pipe “I”	1	1	
14-35	99AA-2-0160	ｵｲﾙﾊﾟｲﾌﾟ J Oil Pipe “J”	1	1	
14-36	3B7-09052-0	ｸﾘｯﾌﾟ、φ6.9 Clip, φ6.9	8	8	
14-37	3T5-84398-0	ﾘｰﾄﾞﾜｲﾔﾊﾞﾝﾄﾞ、104 Lead Wire Band, 104	8	8	
14-38	3T5-02239-0	ﾌｨﾙﾀﾌﾟﾚｰﾄ Filter Plate	1	1	
14-39	3T4-06972-0	ｸﾗﾝﾌﾟ、6.5-87P Clamp, 6.5-87P	1	1	
14-40	910103-6614	ﾎﾞﾙﾄ Bolt	1	1	

ﾄﾞﾗｲﾌﾞｼｬﾌﾄﾊｳｼﾝｸﾞ
Fig.15 DRIVE SHAFT HOUSING

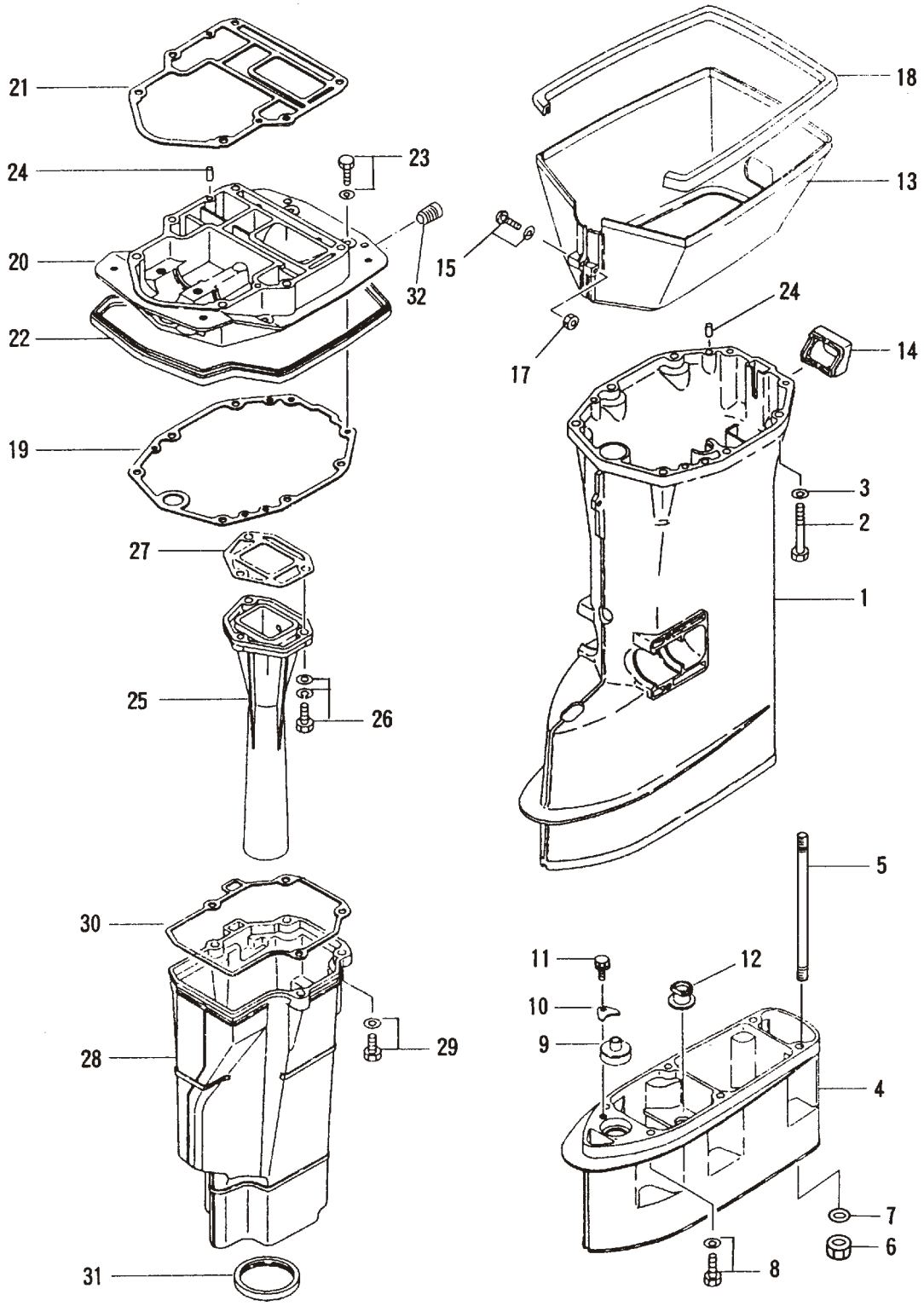

見出番号 Ref. No.	部品番号 Part No.	部　品　名 Description	個数 Q'ty D 50 B	個数 Q'ty D 40 B	備　考 Remarks
15-1	3C8Q61191-1	ﾄﾞﾗｲﾌﾞｼｬﾌﾄﾊｳｼﾞﾝｸﾞ S Drive Shaft Housing "S"	1	1	for Transom "S"
	3C8Q61192-0	ﾄﾞﾗｲﾌﾞｼｬﾌﾄﾊｳｼﾞﾝｸﾞ L Drive Shaft Housing "L"	1	1	for Transom "L" & "UL"
15-2	916113-0880	ﾎﾞﾙﾄ Bolt	6	6	
15-3	940113-0800	ﾜｯｼｬ Washer	6	6	
15-4	3C8Q61120-0	ｴｸｽﾃﾝｼｮﾝﾊｳｼﾞﾝｸﾞ LL Extension Housing "LL"	1	1	for Transom "LL"
	3C8Q61110-0	ｴｸｽﾃﾝｼｮﾝﾊｳｼﾞﾝｸﾞ UL Extension Housing "UL"	1	1	for Transom "UL"
15-5	346-61111-1	ｽﾀｯﾄﾞﾎﾞﾙﾄ、8-104 Stud Bolt, 8-104	6	6	
15-6	930113-0800	ﾅｯﾄ Nut	6	6	for Transom "LL"
15-7	940113-0800	ﾜｯｼｬ Washer	6	6	
15-8	910113-5835	ﾎﾞﾙﾄ Bolt	6	6	
15-9	346-66037-0	ｶﾑﾛｯﾄﾞﾎﾙﾀﾞ Cam Rod Holder	1	1	
15-10	353-66024-0	ｽﾄｯﾊﾟ Stopper	1	1	for Transom "UL"
15-11	910103-6612	ﾎﾞﾙﾄ Bolt	1	1	
15-12	346-65204-0	ｳｫｰﾀﾊﾟｲﾌﾟｵｰｸｼﾞｭｱﾘｰﾏｳﾝﾄ Water Pipe Auxiliary Mount	1	1	ｳｫｰﾀﾊﾟｲﾌﾟﾛｯｸﾗﾊﾞｰ Water Pipe Locking Rubber
15-13	3C8Q61210-0	ｴﾌﾟﾛﾝ Apron	1	1	
15-14	3C8-61212-0	ｴﾌﾟﾛﾝｸﾞﾛﾒｯﾄ Apron Grommet	1	1	
15-15	922513-5540	ｽｸﾘｭ Screw	1	1	
15-17	930403-0500	ﾅｲﾛﾝﾅｯﾄ、5-P0.8 Nylon Nut, 5-P0.8	1	1	
15-18	3C8-61213-0	ｴﾌﾟﾛﾝｼｰﾙ Apron Seal	1	1	
15-19	3C8-61012-1	ﾄﾞﾗｲﾌﾞｼｬﾌﾄﾊｳｼﾞﾝｸﾞｶﾞｽｹｯﾄ Drive Shaft Housing Gasket	1	1	
15-20	3T5Q01301-0	ｴﾝｼﾞﾝﾍﾞｰｽ Engine Basement	1	1	
15-21	3C8-01303-1	ｴﾝｼﾞﾝﾍﾞｰｽｶﾞｽｹｯﾄ Engine Basement Gasket	1	1	
15-22	3C8-67116-0	ｴﾝｼﾞﾝﾍﾞｰｽｼｰﾙ Engine Basement Seal	1	1	
15-23	910113-5625	ﾎﾞﾙﾄ Bolt	4	4	
15-24	345-01111-0	ﾀﾞｳｴﾙﾋﾟﾝ、6-12 Dowel Pin, 6-12	4	4	
15-25	3E3-02311-0	ｴｷｿﾞｰｽﾄﾊﾟｲﾌﾟ Exhaust Pipe	1	1	
15-26	3C8-02319-0	ﾎﾞﾙﾄ、8-30 Bolt, 8-30	3	3	
15-27	3C8-02312-1	ｴｷｿﾞｰｽﾄﾊﾟｲﾌﾟｶﾞｽｹｯﾄ Exhaust Pipe Gasket	1	1	
15-28	3C8-61180-0	ｴｷｿﾞｰｽﾄﾊｳｼﾞﾝｸﾞ Exhaust Housing	1	1	
15-29	3C8-61184-0	ﾎﾞﾙﾄ、8-30 Bolt, 8-30	4	4	

ﾄﾞﾗｲﾌﾞｼｬﾌﾄﾊｳｼﾝｸﾞ
Fig.15 DRIVE SHAFT HOUSING

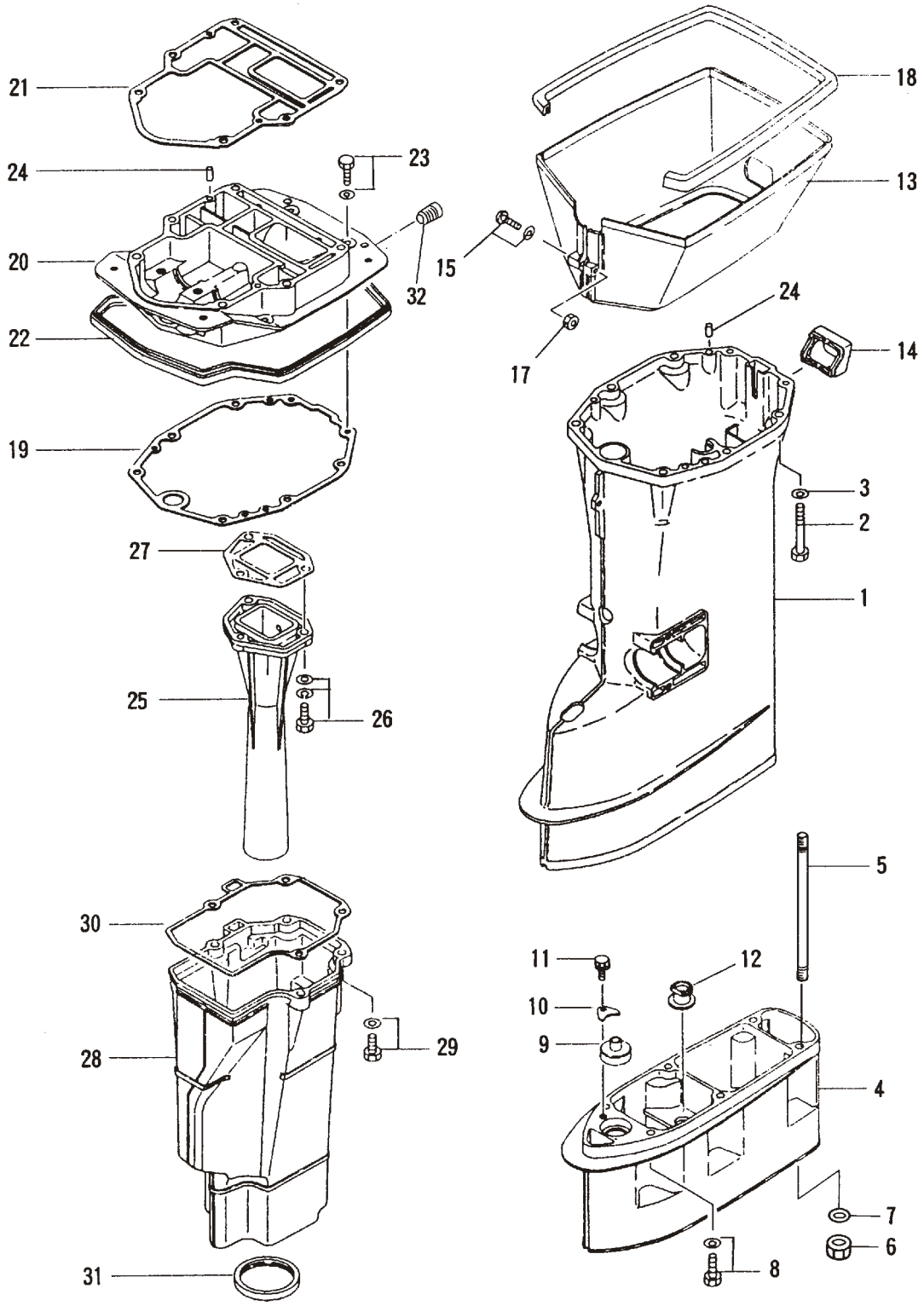

見出番号 Ref. No.	部品番号 Part No.	部　品　名 Description	個数 Q'ty D 50 B	個数 Q'ty D 40 B	備　考 Remarks
15-30	3C8-61181-1	ｴｷｿﾞｰｽﾄﾊｳｼﾞﾝｸﾞｶﾞｽｹｯﾄ Exhaust Housing Gasket	1	1	
15-31	3C8-61182-0	ｴｷｿﾞｰｽﾄﾊｳｼﾞﾝｸﾞｸﾞﾛﾒｯﾄ Exhaust Housing Grommet	1	1	
15-32	3H6-07257-0	ｴｷｿﾞｰｽﾄﾌﾟﾗｸﾞ Exhaust Plug	1	1	

ｷﾞﾔｹｰｽ（ﾄﾞﾗｲﾌﾞｼｬﾌﾄ）
Fig.16 GEAR CASE (DRIVE SHAFT)

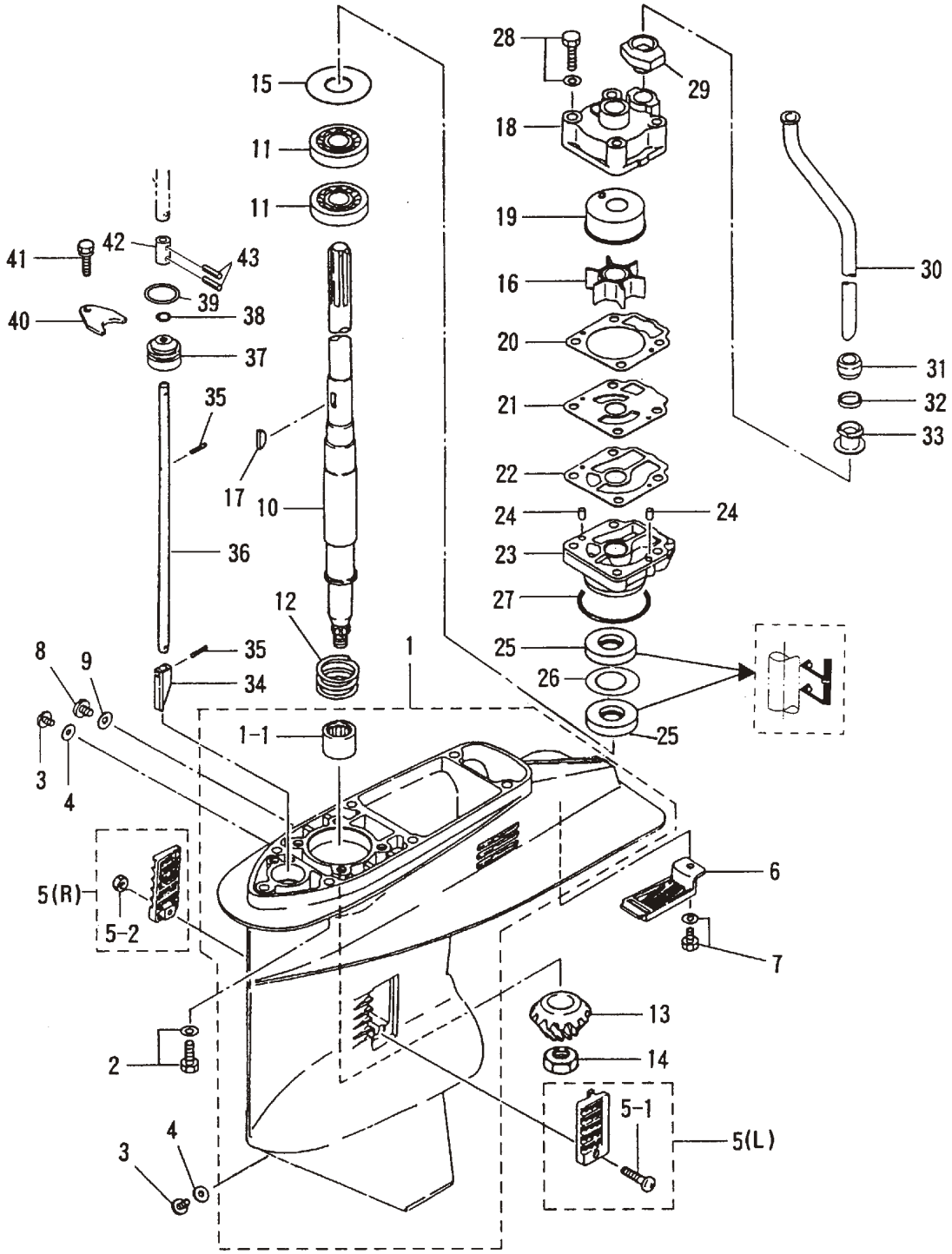

見出番号 Ref. No.	部品番号 Part No.	部　品　名 Description	個数 Q'ty D 50 B	個数 Q'ty D 40 B	備　考 Remarks
16-1	3C8Q60000-0	ｷﾞﾔｹｰｽ Gear Case	1	1	for Transom “S”,“L”&“LL”
	3C8Q60090-0	ｷﾞﾔｹｰｽ（ ｻﾌﾞｳｫｰﾀﾊﾟｲﾌﾟ付） Gear Case (with Sub Water Pie)	1	1	for Transom “UL”
16-1-1	345-60211-0	ﾆｰﾄﾞﾙﾍﾞｱﾘﾝｸﾞ、22-30-30 ＊ Needle Bearing, 22-30-30	1	1	
16-2	910113-5835	ﾎﾞﾙﾄ Bolt	6	6	
16-3	332-60005-2	ｵｲﾙﾌﾟﾗｸﾞ Oil Plug	2	2	
16-4	332-60006-0	ｶﾞｽｹｯﾄ、8.1-15-1 Gasket, 8.1-15-1	2	2	
16-5	3C8-60235-1	ｳｫｰﾀｽﾄﾚｰﾅｾｯﾄ Water Strainer Set	1 set	1 set	
16-5-1	921503-0438	ｽｸﾘｭ ＊ Screw	1	1	
16-5-2	930403-0400	ﾅｲﾛﾝﾅｯﾄ、4-P0.7 ＊ Nylon Nut, 4-P0.7	1	1	
16-6	3C8-60204-0	ｻﾌﾞｳｫｰﾀｽﾄﾚｰﾅ Sub Water Strainer	1	1	
16-7	910113-5616	ﾎﾞﾙﾄ Bolt	1	1	
16-8	3B7-60015-1	ｳｫｰﾀﾌﾟﾗｸﾞ Water Plug	1	1	
16-9	3B7-60016-1	ｶﾞｽｹｯﾄ、10.1-15-1 Gasket, 10.1-15-1	1	1	
16-10	3C8-64301-0	ﾄﾞﾗｲﾌﾞｼｬﾌﾄ S Drive Shaft “S”	1	1	for Transom “S”
	3C8-64302-0	ﾄﾞﾗｲﾌﾞｼｬﾌﾄ L Drive Shaft “L”	1	1	for Transom “L”
	3C8-64304-0	ﾄﾞﾗｲﾌﾞｼｬﾌﾄ LL Drive Shaft “LL”	1	1	for Transom “LL”
	3C8-64303-0	ﾄﾞﾗｲﾌﾞｼｬﾌﾄ UL Drive Shaft “UL”	1	1	for Transom “UL”
16-11	3C8-60213-0	ﾍﾞｱﾘﾝｸﾞ、6304 Bearing, 6304	2	2	
16-12	3C8-64327-0	ﾄﾞﾗｲﾌﾞｼｬﾌﾄｽﾌﾟﾘﾝｸﾞ Drive Shaft Spring	1	1	
16-13	3C8-64020-2	ﾍﾞﾍﾞﾙｷﾞﾔ B Bevel Gear “B”	1	1	#038130XC～
16-14	3C8-64027-0	ﾍﾞﾍﾞﾙｷﾞﾔ B ﾅｯﾄ Bevel Gear “B” Nut	1	1	
16-15	345-64081-0	ｼﾑ、41-51.5-0.1 Shim, 41-51.5-0.1	AR	AR	
	345-64082-0	ｼﾑ、41-51.5-0.15 Shim, 41-51.5-0.15	AR	AR	
	345-64083-0	ｼﾑ、41-51.5-0.3 Shim, 41-51.5-0.3	AR	AR	
	345-64084-0	ｼﾑ、41-51.5-0.5 Shim, 41-51.5-0.5	AR	AR	
16-16	3C8-65021-2	ｳｫｰﾀﾎﾟﾝﾌﾟｲﾝﾍﾟﾗ Water Pump Impeller	1	1	
16-17	332-65022-0	ｳｫｰﾀﾎﾟﾝﾌﾟｲﾝﾍﾟﾗｷｰ Water Pump Impeller Key	1	1	
16-18	3T5-65016-0	ﾎﾟﾝﾌﾟｹｰｽ（ｱｯﾊﾟ） Pump Case (Upper)	1	1	
16-19	3T5-65011-0	ﾎﾟﾝﾌﾟｹｰｽﾗｲﾅ Pump Case Liner	1	1	
16-20	3T5-65018-1	ﾎﾟﾝﾌﾟｹｰｽｶﾞｽｹｯﾄ Pump Case Gasket	1	1	

ｷﾞﾔｹｰｽ（ﾄﾞﾗｲﾌﾞｼｬﾌﾄ）
Fig.16 GEAR CASE (DRIVE SHAFT)

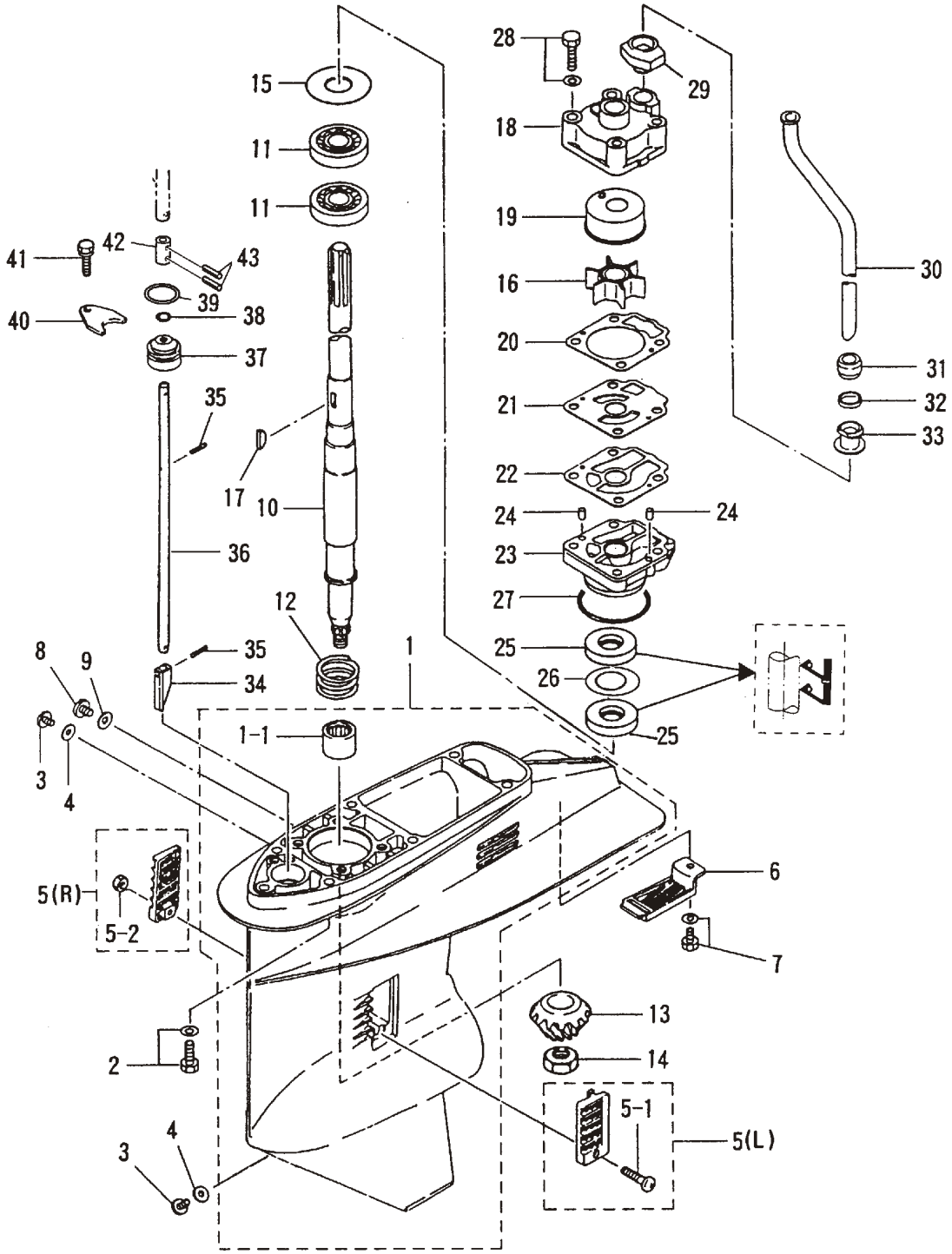

見出番号 Ref. No.	部品番号 Part No.	部　品　名 Description	個数 Q'ty D 50 B	D 40 B	備　考 Remarks
16-21	3C8-65025-0	ｳｫｰﾀﾎﾟﾝﾌﾟｶﾞｲﾄﾞﾌﾟﾚｰﾄ Water Pump Guide Plate	1	1	
16-22	3C8-65029-1	ｶﾞｲﾄﾞﾌﾟﾚｰﾄｶﾞｽｹｯﾄ Guide Plate Gasket	1	1	
16-23	3C8-65017-1	ﾎﾟﾝﾌﾟｹｰｽ (ﾛﾜ) Pump Case (Lower)	1	1	
16-24	334-65012-0	ﾀﾞｳｴﾙﾋﾟﾝ、4-10 Dowel Pin, 4-10	2	2	
16-25	3C8-60223-0	ｵｲﾙｼｰﾙ、17-33-6 Oil Seal, 17--33-6	2	2	
16-26	3C8-64084-0	ｼﾑ、32.9-26-0.5 Shim, 32.9-26-0.5	1	1	
16-27	345-65015-0	O ﾘﾝｸﾞ、3.2-47 O-Ring, 3.2-47	1	1	
16-28	910113-5855	ﾎﾞﾙﾄ Bolt	4	4	
16-29	3C8-65014-0	ｳｫｰﾀﾊﾟｲﾌﾟｼｰﾙ (ﾛﾜ) Water Pipe Seal (Lower)	1	1	
16-30	3C8-65100-0	ｳｫｰﾀﾊﾟｲﾌﾟ S Water Pipe “S”	1	1	for Transom “S”
	3C8-65110-0	ｳｫｰﾀﾊﾟｲﾌﾟ L Water Pipe “L”	1	1	for Transom “L”
	3C8-65130-0	ｳｫｰﾀﾊﾟｲﾌﾟ LL Water Pipe “LL”	1	1	for Transom “LL”
	3C8-65120-0	ｳｫｰﾀﾊﾟｲﾌﾟ UL Water Pipe “UL”	1	1	for Transom “UL”
16-31	345-65206-0	ｳｫｰﾀﾊﾟｲﾌﾟｼｰﾙ (ｱｯﾊﾟ) Water Pipe Seal (Upper)	1	1	
16-32	345-65205-0	ｶﾗｰ、18-20-4.5 Collar, 18-20-4.5	1	1	
16-33	346-65204-0	ｳｫｰﾀﾊﾟｲﾌﾟｵｰｸｼﾞｭｱﾘｰﾏｳﾝﾄ Water Pipe Auxiliary Mount	1	1	ｳｫｰﾀﾊﾟｲﾌﾟﾛｯｸﾗﾊﾞｰ Water Pipe Locking Rubber
16-34	3C8-66011-0	ｸﾗｯﾁｶﾑ Clutch Cam	1	1	
16-35	951407-0312	ｽﾌﾟﾘﾝｸﾞﾋﾟﾝ、3-12 Spring Pin, 3-12	2	2	
16-36	3C8-66012-0	ｶﾑﾛｯﾄﾞ S Cam Rod “S”	1	1	for Transom “S”
	3C8-66013-0	ｶﾑﾛｯﾄﾞ L Cam Rod “L”	1	1	for Transom “L”
	3C8-66015-0	ｶﾑﾛｯﾄﾞ LL Cam Rod “LL”	1	1	for Transom “LL”
	3C8-66014-0	ｶﾑﾛｯﾄﾞ UL Cam Rod “UL”	1	1	for Transom “UL”
16-37	3C8-66031-1	ｶﾑﾛｯﾄﾞﾌﾞｯｼﾝｸﾞ Cam Rod Bushing	1	1	
16-38	332-66021-0	O ﾘﾝｸﾞ、2.4-5.8 O-Ring, 2.4-5.8	1	1	
16-39	3C8-66032-0	O ﾘﾝｸﾞ、3.5-21.7 O-Ring, 3.5-21.7	1	1	
16-40	353-66024-0	ｽﾄｯﾊﾟ Stopper	1	1	
16-41	910103-6612	ﾎﾞﾙﾄ Bolt	1	1	
16-42	3C8-66241-0	ｼﾌﾄﾛｯﾄﾞｼﾞｮｲﾝﾄ Shift Rod Joint	1	1	
16-43	951403-0312	ｽﾌﾟﾘﾝｸﾞﾋﾟﾝ、3-12 Spring Pin, 3-12	2	2	

ｷﾞﾔｹｰｽ（ﾌﾟﾛﾍﾟﾗｼｬﾌﾄ）

Fig.17　GEAR CASE (PROPELLER SHAFT)

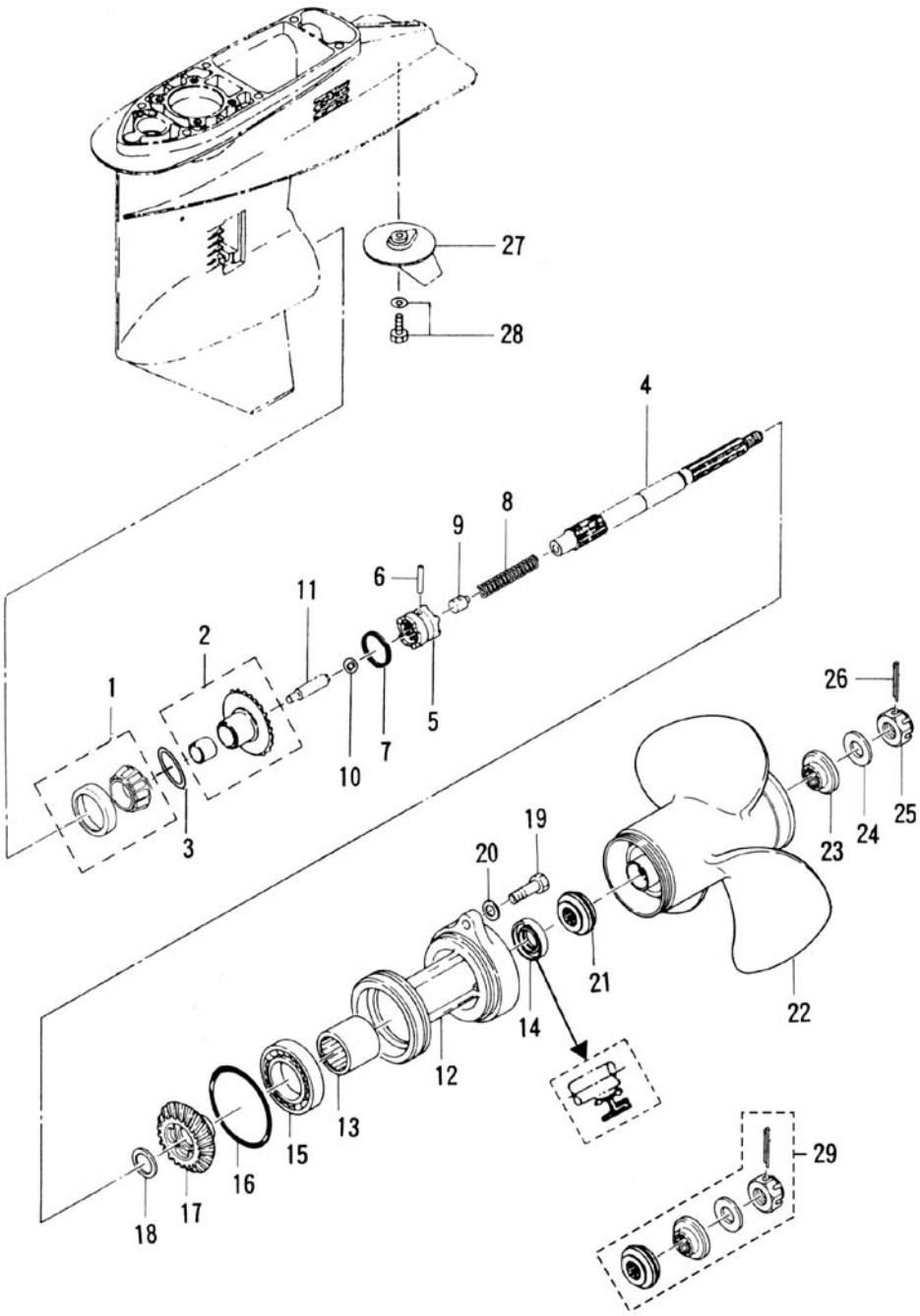

見出番号 Ref. No.	部品番号 Part No.	部　品　名 Description	個数 Q'ty D 50 B	個数 Q'ty D 40 B	備　考 Remarks
17-1	345-60215-0	ﾃｰﾊﾟｰﾛｰﾗﾍﾞｱﾘﾝｸﾞ、32007 Taper Roller Bearing, 32007	1	1	
17-2	3C8-64010-1	ﾍﾞﾍﾞﾙｷﾞﾔ A Bevel Gear "A"	1	1	
17-3	353-64036-0	ｼﾑ、36-44-0.3 Shim, 36-44-0.3	AR	AR	
	353-64037-0	ｼﾑ、36-44-0.15 Shim, 36-44-0.15	AR	AR	
	353-64038-0	ｼﾑ、36-44-0.1 Shim, 36-44-0.1	AR	AR	
17-4	3C8-64211-0	ﾌﾟﾛﾍﾟﾗｼｬﾌﾄ Propeller Shaft	1	1	
17-5	3C8-64215-2	ｸﾗｯﾁ Clutch	1	1	#038130XC～
17-6	3C8-64217-0	ｸﾗｯﾁﾋﾟﾝ Clutch Pin	1	1	
17-7	3C8-64219-1	ｸﾗｯﾁﾋﾟﾝｽﾅｯﾌﾟ Clutch Pin Snap	1	1	
17-8	3C8-64221-0	ｸﾗｯﾁｽﾌﾟﾘﾝｸﾞ Clutch Spring	1	1	
17-9	3C8-64222-0	ｸﾗｯﾁｽﾌﾟﾘﾝｸﾞﾘﾃｰﾅ Clutch Spring Retainer	1	1	
17-10	965002-0803	ｽﾁｰﾙﾎﾞｰﾙ、3/8 Steel Ball, 3/8	1	1	
17-11	3C8-64223-1	ｸﾗｯﾁﾌﾟｯｼｭﾛｯﾄﾞ Clutch Push Rod	1	1	
17-12	3C8Q60101-0	ﾌﾟﾛﾍﾟﾗｼｬﾌﾄﾊｳｼﾞﾝｸﾞ Propeller Shaft Housing	1	1	
17-13	345-60211-0	ﾆｰﾄﾞﾙﾍﾞｱﾘﾝｸﾞ、22-30-30 Needle Bearing, 22-30-30	1	1	
17-14	334-60223-0	ｵｲﾙｼｰﾙ、22-36-10 Oil Seal, 22-36-10	1	1	
17-15	9601-0-6007	ﾍﾞｱﾘﾝｸﾞ、6007 Bearing, 6007	1	1	
17-16	345-60103-0	O ﾘﾝｸﾞ、3.53-69.44 O-Ring, 3.53-69.44	1	1	
17-17	3C8-64030-0	ﾍﾞﾍﾞﾙｷﾞﾔ C Bevel Gear "C"	1	1	
17-18	345-64032-0	ﾜｯｼｬ、22.1-28-3 Washer, 22.1-28-3	1	1	
17-19	3C8-60108-0	ﾎﾞﾙﾄ、6-25 ﾌﾟﾚｺｰﾄ Bolt, 6-25 Pre-coated	2	2	
17-20	940113-0600	ﾜｯｼｬ Washer	2	2	
17-21	3C8-64231-0	ｽﾗｽﾄﾎﾙﾀﾞ Thrust Holder	1	1	
17-22	348W64108-0	ﾌﾟﾛﾍﾟﾗ 7 (4×290×180) Propeller 7 (4×11.4×7.1)	1	1	
	3T5W64518-0	ﾌﾟﾛﾍﾟﾗ CS 9 (3×307×229) Propeller CS 9 (3×12.1×9.0)	1	1	
	3T5W64523-0	ﾌﾟﾛﾍﾟﾗ CS 11 (3×295×279) Propeller CS 11 (3×11.6×11.0)	1	1	
	3T5W64525-0	ﾌﾟﾛﾍﾟﾗ CS 12 (3×290×305) Propeller CS 12 (3×11.4×12.0)	1	1	40B STD.
	3T5W64527-0	ﾌﾟﾛﾍﾟﾗ CS 13 (3×282×330) Propeller CS 13 (3×11.1×13.0)	1	1	50B STD.
	3T5W64529-0	ﾌﾟﾛﾍﾟﾗ CS 14 (3×282×356) Propeller CS 14 (3×11.1×14.0)	1	1	
	3T5W64532-0	ﾌﾟﾛﾍﾟﾗ CS 15 (3×279×381) Propeller CS 15 (3×11.0×15.0)	1	1	

ｷﾞﾔｹｰｽ（ﾌﾟﾛﾍﾟﾗｼｬﾌﾄ）
Fig.17 GEAR CASE (PROPELLER SHAFT)

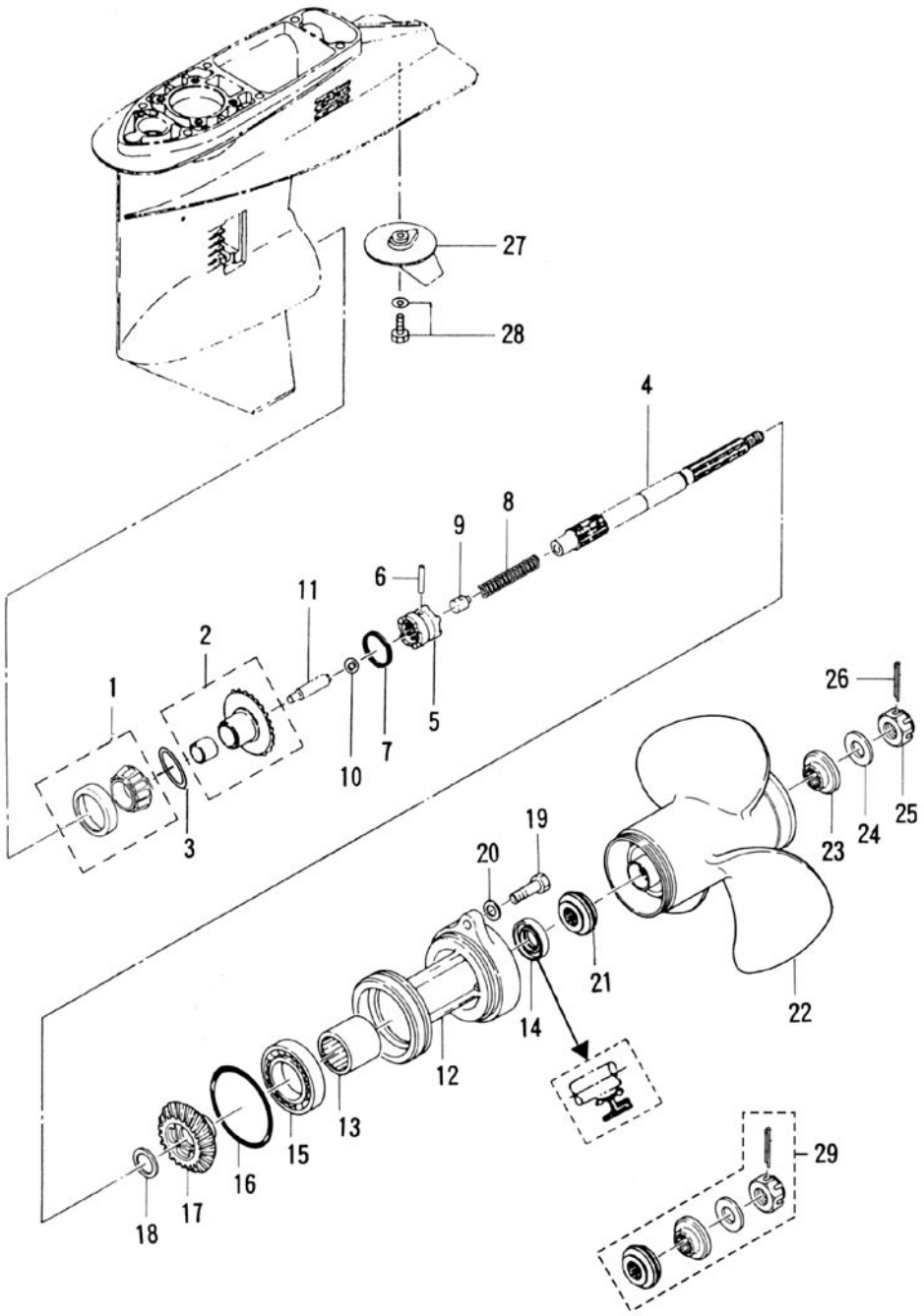

見出番号 Ref. No.	部品番号 Part No.	部　品　名 Description	個数 Q'ty D 50 B	個数 Q'ty D 40 B	備　考 Remarks
17-23	348-64232-0	ﾌﾟﾛﾍﾟﾗｽﾄｯﾊﾟ Propeller Stopper	1	1	
17-24	345-64124-0	ﾜｯｼｬ、17-32-3 Washer, 17-32-3	1	1	
17-25	353-64121-0	ﾌﾟﾛﾍﾟﾗﾅｯﾄ Propeller Nut	1	1	
17-26	951503-0325	ｽﾌﾟﾘｯﾄﾋﾟﾝ、3-25 Split Pin, 3-25	1	1	
17-27	3C8-60217-1	ﾄﾘﾑﾀﾌﾞ Trim Tab	1	1	
17-28	910103-5620	ﾎﾞﾙﾄ Bolt	1	1	
17-29	3T5-87326-0	ﾌﾟﾛﾍﾟﾗﾊｰﾄﾞｳｪｱｷｯﾄ Propeller Hard Wear Kit	1 set	1 set	

シフト
Fig.18 SHIFT

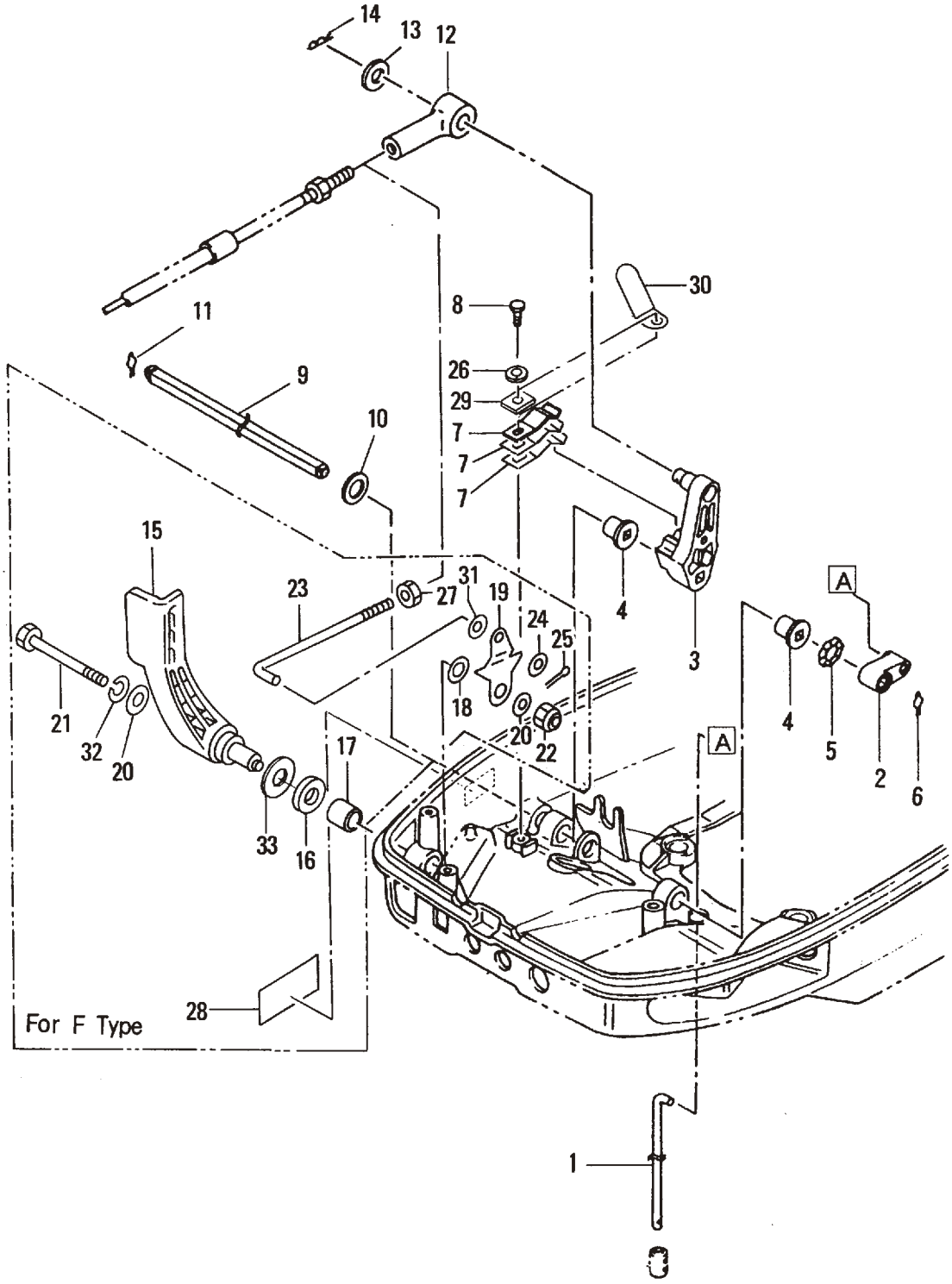

見出番号 Ref. No.	部品番号 Part No.	部　品　名 Description	個数 Q'ty D 50 B	個数 Q'ty D 40 B	備　考 Remarks
18-1	3C8-66211-0	ｼﾌﾄﾛｯﾄﾞ Shift Rod	1	1	
18-2	3C8-66225-0	ｼﾌﾄﾛｯﾄﾞﾚﾊﾞｰ Shift Rod Lever	1	1	
18-3	3C8-66122-1	ｼﾌﾄｱｰﾑ Shift Arm	1	1	
18-4	350-67101-0	ｼﾌﾄﾚﾊﾞｰｼｬﾌﾄﾌﾞｯｼﾝｸﾞ Shift Lever Shaft Bushing	2	2	
18-5	941403-1200	ｳｪｰﾌﾞﾜｯｼｬ、d=12 Wave Washer, d=12	1	1	
18-6	951703-0800	ｽﾅｯﾌﾟﾘﾃｰﾅ、d=8 Snap Retainer, d=8	1	1	
18-7	3C8-66112-0	ｼﾌﾄﾚﾊﾞｰｽﾄｯﾊﾟ Shift Lever Stopper	1	1	for “P” Type
	3C8-66112-0	ｼﾌﾄﾚﾊﾞｰｽﾄｯﾊﾟ Shift Lever Stopper	3	3	for “F” Type
18-8	910114-0614	ﾎﾞﾙﾄ Bolt	1	1	
18-9	3C8-66135-0	ｼﾌﾄｼｬﾌﾄ Shift Shaft	1	1	
18-10	3AA-83719-0	ﾜｯｼｬ、8.5-18-1.6 Washer, 8.5-18-1.6	1	1	
18-11	951703-0800	ｽﾅｯﾌﾟﾘﾃｰﾅ、d=8 Snap Retainer, d=8	3	3	
18-12	3B7-83715-1	ｹｰﾌﾞﾙｼﾞｮｲﾝﾄ Cable Joint	1	1	for “P” Type
18-13	3AA-83719-0	ﾜｯｼｬ、8.5-18-1.6 Washer, 8.5-18-1.6	1	1	
18-14	951603-0800	ｽﾅｯﾌﾟﾋﾟﾝ、d=8 Snap Pin, d=8	1	1	
18-15	3T5-66110-0	ｼﾌﾄﾚﾊﾞｰ Shift Lever	1	1	
18-16	3T5-67147-0	ｼｰﾙﾘﾝｸﾞ、13.8-22-5 Seal Ring, 13.8-22-5	1	1	
18-17	350-67105-0	ﾌﾞｯｼﾝｸﾞ、14-16.5-17.7 Bushing, 14-16.5-17.7	1	1	
18-18	941403-1400	ｳｪｰﾌﾞﾜｯｼｬ、d=14 Wave Washer, d=14	1	1	
18-19	3T5-66129-0	ｼﾌﾄﾚﾊﾞｰ B Shift Lever “B”	1	1	
18-20	3R0-66308-0	ﾜｯｼｬ、6.5916-1.5 Washer, 6.5-16-1.5	2	2	
18-21	910103-0670	ﾎﾞﾙﾄ Bolt	1	1	
18-22	930403-0600	ﾅｲﾛﾝﾅｯﾄ、6-P1.0 Nylon Nut, 6-P1.0	1	1	for “F” Type
18-23	3T5-66134-0	ｼﾌﾄﾚﾊﾞｰﾛｯﾄﾞ Shift Lever Rod	1	1	
18-24	940103-0500	ﾜｯｼｬ Washer	1	1	
18-25	951503-0212	ｽﾌﾟﾘｯﾄﾋﾟﾝ、2-12 Sprit Pin, 2-12	1	1	
18-26	940103-0600	ﾜｯｼｬ Washer	1	1	
18-27	3B2-83865-0	ﾅｯﾄ (No. 10-32VNF) Nut (No.10-32VNF)	1	1	
18-28	3T5-67578-0	ｼﾌﾄﾃﾞｶﾙ Shift Decal	1	1	
18-29	3C8-66116-0	ｼﾌﾄﾚﾊﾞｰｽﾄｯﾊﾟﾌﾟﾚｰﾄ Shift Lever Stopper Plate	1	1	for “P” Type

シフト
Fig.18 SHIFT

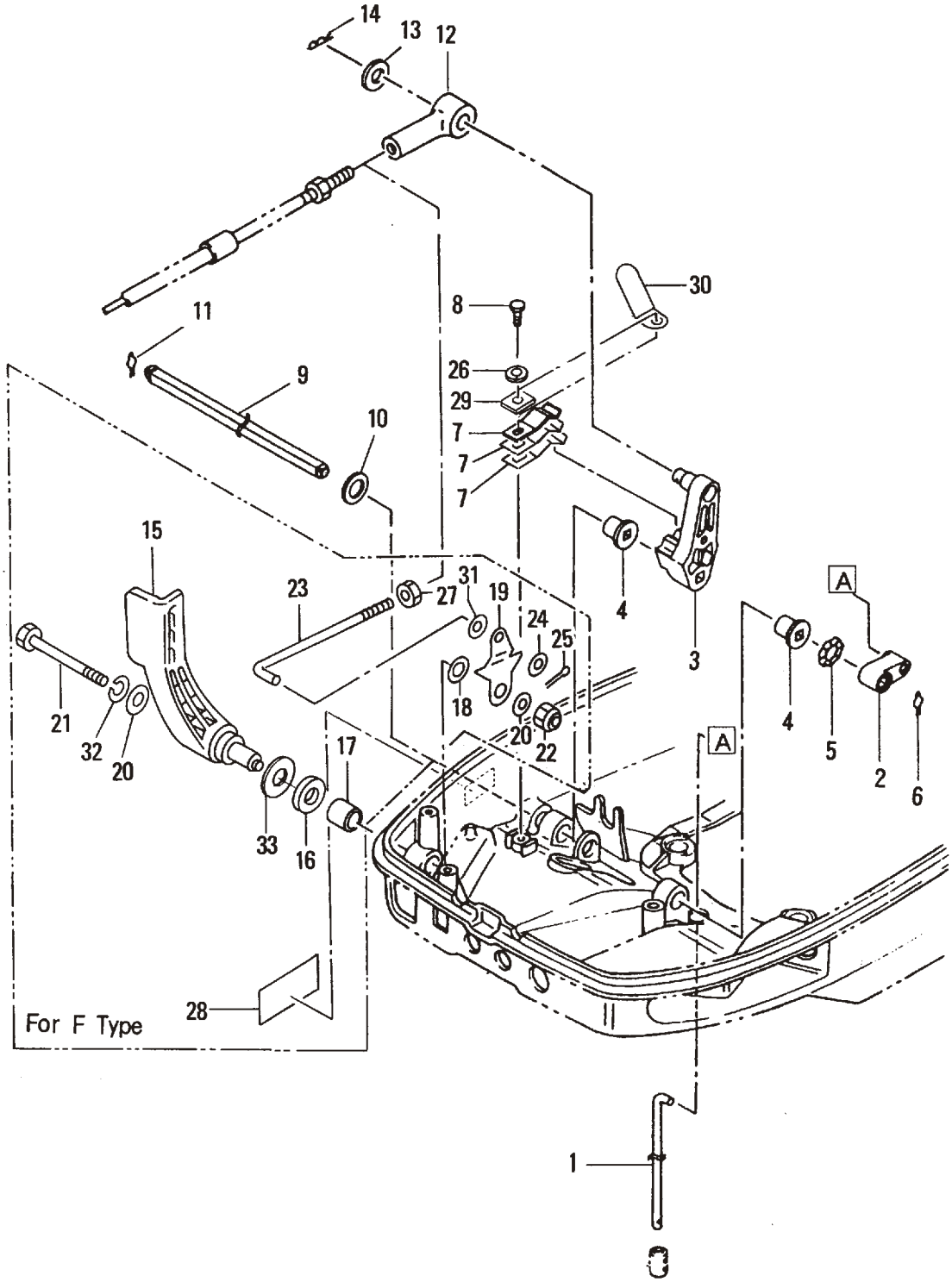

見出番号 Ref. No.	部品番号 Part No.	部　品　名 Description	個数 Q'ty D 50 B	個数 Q'ty D 40 B	備　考 Remarks
18-30	309-06972-0	ｸﾗﾝﾌﾟ、6.5-47.5P Clamp, 6.5-47.5P	1	1	
18-31	940113-0600	ﾜｯｼｬ Washer	1	1	
18-32	941303-0600	ｽﾌﾟﾘﾝｸﾞﾜｯｼｬ Spring Washer	1	1	
18-33	3C8-67146-0	ﾜｯｼｬ、14-22-1 Washer, 14-22-1	1	1	

ブラケット (1) マニュアルチルト

Fig.19 BRACKET (1) MANUAL TILT

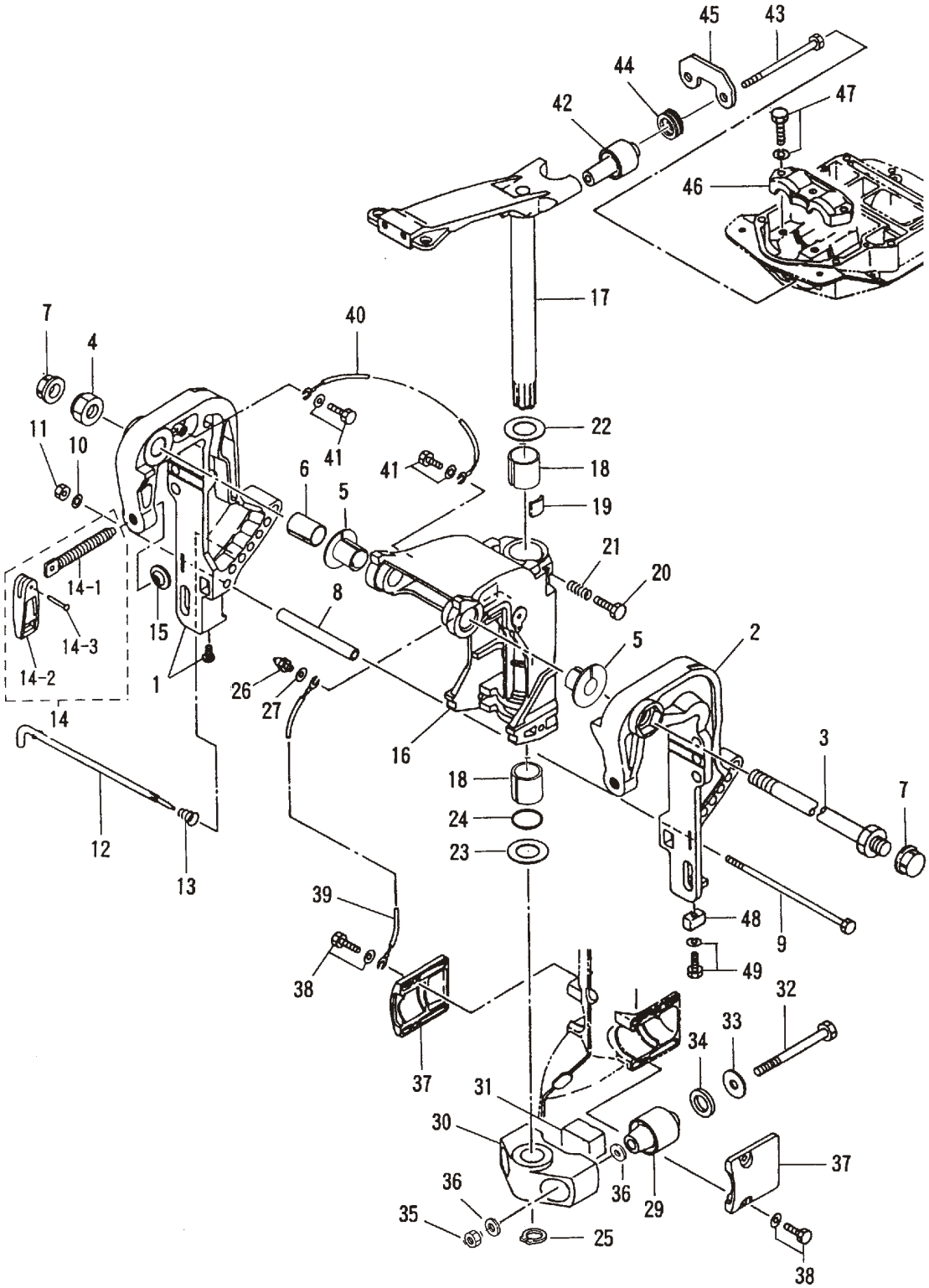

見出番号 Ref. No.	部品番号 Part No.	部　品　名 Description	個数 Q'ty D 50 B	個数 Q'ty D 40 B	備　考 Remarks
19-1	3C8Q62112-0	ｸﾗﾝﾌﾟﾌﾞﾗｹｯﾄ (ﾗｲﾄ) Clamp Bracket (Right)	1	1	Stern Bracket (Right) Starboard
19-2	3C8Q62113-0	ｸﾗﾝﾌﾟﾌﾞﾗｹｯﾄ (ﾚﾌﾄ) Clamp Bracket (Left)	1	1	Stern Bracket (Left) Port
19-3	3AC-62191-0	ｽｲﾍﾞﾙﾌﾞﾗｹｯﾄｼｬﾌﾄ Swivel Bracket Shaft	1	1	Bracket Bolt or 346-62191-0
19-4	346-62124-1	ﾅｲﾛﾝﾅｯﾄ、7/8 Nylon Nut, 7/8	1	1	
19-5	349-62126-0	ﾌﾞﾗｹｯﾄｼｬﾌﾄﾌﾞｯｼﾝｸﾞ Bracket Shaft Bushing	2	2	
19-6	3C8-62132-0	ﾌﾞｯｼﾝｸﾞ、22-25-35.5 Bushing, 22-25-35.5	1	1	
19-7	346-62127-0	ﾌﾞﾗｹｯﾄｼｬﾌﾄｷｬｯﾌﾟ Bracket Shaft Cap	2	2	for "F" Type
19-8	3C8-62117-1	ﾃﾞｨｽﾀﾝｽﾋﾟｰｽ Distance Piece	1	1	
19-9	3C8-62120-1	ﾎﾞﾙﾄ、8-170 Bolt, 8-170	1	1	
19-10	940113-0800	ﾜｯｼｬ Washer	1	1	
19-11	930113-0800	ﾅｯﾄ Nut	1	1	
19-12	3C8-62121-1	ｽﾗｽﾄﾛｯﾄﾞ Thrust Rod	1	1	
19-13	345-62122-2	ｽﾗｽﾄﾛｯﾄﾞｽﾌﾟﾘﾝｸﾞ Thrust Rod Spring	1	1	
19-14	3C8Q62100-1	ｸﾗﾝﾌﾟｽｸﾘｭｱｯｼ Clamp Screw Ass'y	2	2	
19-14-1	3E3-62103-0	＊ ｸﾗﾝﾌﾟｽｸﾘｭ Clamp Screw	2	2	
19-14-2	332Q62102-1	＊ ｸﾗﾝﾌﾟｽｸﾘｭﾊﾝﾄﾞﾙ Clamp Screw Handle	2	2	
19-14-3	3C8-62104-1	＊ ﾘﾍﾞｯﾄ、3-22 Rivet, 3-22	2	2	
19-15	332-62101-0	ｸﾗﾝﾌﾟｽｸﾘｭﾊﾟｯﾄﾞ Clamp Screw Pad	2	2	
19-16	3C8Q62310-2	ｽｲﾍﾞﾙﾌﾞﾗｹｯﾄ Swivel Bracket	1	1	
19-17	3C8Q62010-2	ｽﾃｱﾘﾝｸﾞｼｬﾌﾄ Steering Shaft	1	1	
19-18	345-62417-0	ﾌﾞｯｼﾝｸﾞ、26-32-30 Bushing, 26-32-30	2	2	
19-19	345-62441-0	ﾌﾘｸｼｮﾝﾌﾟﾚｰﾄ Friction Plate	1	1	
19-20	910113-0830	ﾎﾞﾙﾄ Bolt	1	1	
19-21	346-62421-1	ﾌﾘｸｼｮﾝﾌﾟﾚｰﾄｽﾌﾟﾘﾝｸﾞ Friction Plate Spring	1	1	
19-22	3A0-62423-2	ｽﾗｽﾄﾌﾟﾚｰﾄ (ｱｯﾊﾟｰ) Thrust Plate (Upper)	1	1	
19-23	346-62424-1	ｽﾗｽﾄﾌﾟﾚｰﾄ (ﾛﾜ) Thrust Plate (Lower)	1	1	
19-24	345-62415-0	O ﾘﾝｸﾞ、3.5-25.7 O-Ring, 3.5-25.7	1	1	
19-25	945103-2500	C ﾘﾝｸﾞ、d=25 C-Ring, d=25	1	1	
19-26	344-67177-0	ｸﾞﾘｽﾆｯﾌﾟﾙ Grease Fitting	1	1	
19-27	940113-0600	ﾜｯｼｬ Washer	1	1	

ブラケット (1) マニュアルチルト

Fig.19 BRACKET (1) MANUAL TILT

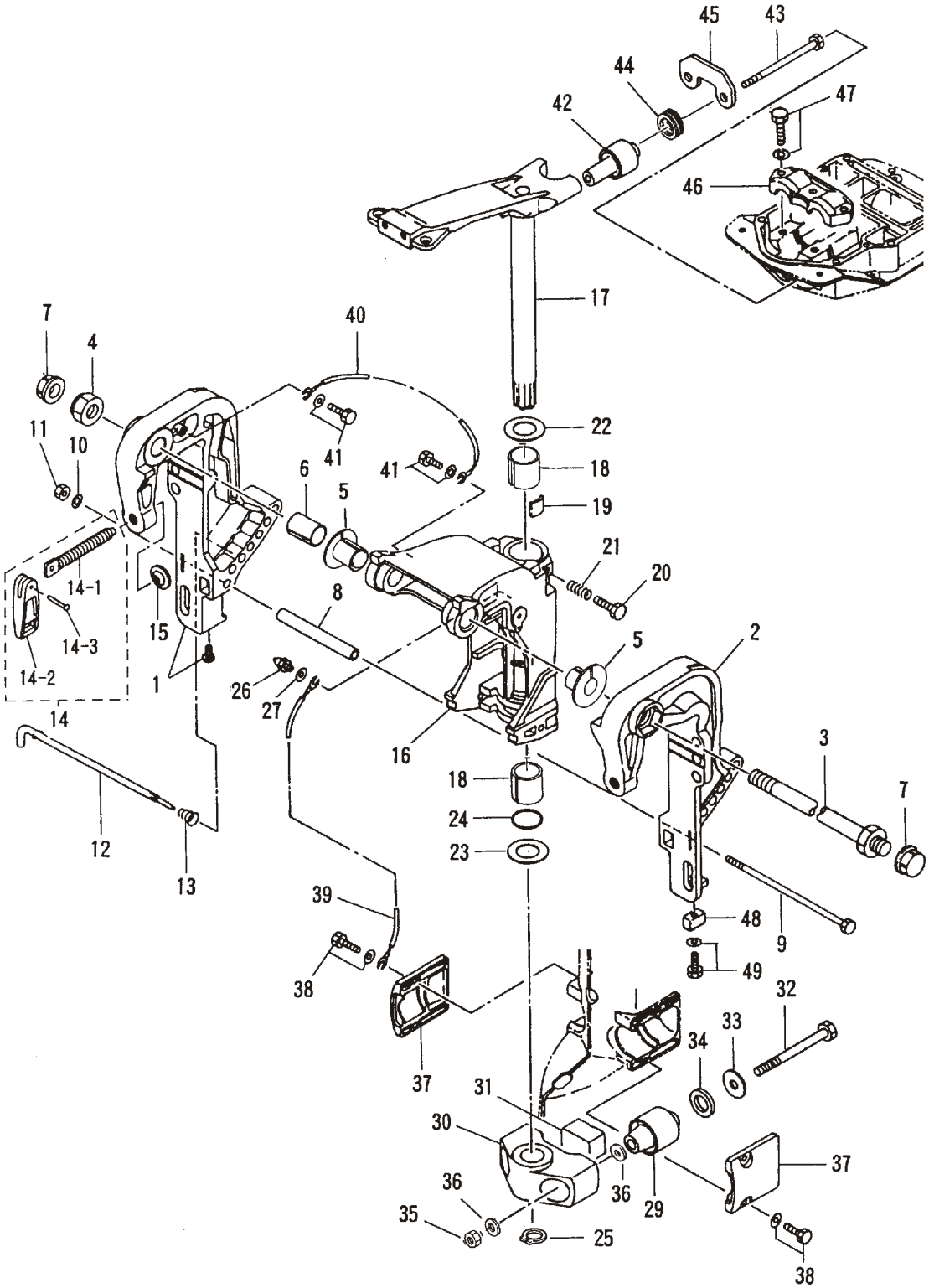

見出番号 Ref. No.	部品番号 Part No.	部　品　名 Description	個数 Q'ty D 50 B	個数 Q'ty D 40 B	備　考 Remarks
19-29	3C8-61302-0	ﾗﾊﾞｰﾏｳﾝﾄ (ﾛﾜ) Rubber Mount (Lower)	2	2	
19-30	3C8Q61411-2	ﾏｳﾝﾄﾌﾞﾗｹｯﾄ Mount Bracket	1	1	
19-31	3C8-61336-0	ﾀﾞﾝﾊﾟ (ﾛﾜ) Damper (Lower)	1	1	
19-32	3C8-61321-1	ﾗﾊﾞｰﾏｳﾝﾄﾎﾞﾙﾄ (ﾛﾜ) Rubber Mount Bolt (Lower)	2	2	
19-33	353-61334-0	ﾜｯｼｬ、13-34-3 Washer, 13-34-3	2	2	
19-34	3C7-61338-0	ﾗﾊﾞｰﾀﾞﾝﾊﾟ、21-36-5 Rubber Damper, 21-36-5	2	2	
19-35	930403-1200	ﾅｲﾛﾝﾅｯﾄ、12-P1.75 Nylon Nut, 12-P1.75	2	2	
19-36	940213-1200	ﾜｯｼｬ Washer	4	4	
19-37	3C8Q61342-0	ﾏｳﾝﾄﾎｰﾙﾃﾞｨﾝｸﾞﾌﾟﾚｰﾄ (ﾛﾜ) Mount Holding Plate (Lower)	2	2	ﾗﾊﾞｰﾏｳﾝﾄｷｬｯﾌﾟ (ﾛﾜ) Rubber Mount Cap (Lower)
19-38	910113-5620	ﾎﾞﾙﾄ Bolt	4	4	
19-39	3C8-62396-1	ｱｰｽﾜｲﾔ Ground Cable	1	1	L=210
19-40	398-62396-1	ｱｰｽﾜｲﾔ Ground Cable	1	1	L=130
19-41	910103-5612	ﾎﾞﾙﾄ Bolt	2	2	
19-42	3E3-61301-1	ﾗﾊﾞｰﾏｳﾝﾄ (ｱｯﾊﾟ) Rubber Mount (Upper)	2	2	
19-43	353-61307-0	ﾗﾊﾞｰﾏｳﾝﾄﾎﾞﾙﾄ (ｱｯﾊﾟ) Rubber Mount Bolt (Upper)	2	2	
19-44	3E3-61333-0	ﾀﾞﾊﾟｰ (ｱｯﾊﾟ) Damper (Upper)	2	2	
19-45	3E3-61335-0	ﾛｯｸﾌﾟﾚｰﾄ (ｱｯﾊﾟ) Lock Plate (Upper)	1	1	
19-46	3C8Q61341-0	ﾏｳﾝﾄﾎｰﾙﾃﾞｨﾝｸﾞﾌﾟﾚｰﾄ (ｱｯﾊﾟ) Mount Holding Plate (Upper)	1	1	ﾗﾊﾞｰﾏｳﾝﾄｷｬｯﾌﾟ (ｱｯﾊﾟ) Rubber Mount Cap (Upper)
19-47	910113-5835	ﾎﾞﾙﾄ Bolt	3	3	
19-48	3B7-60218-1	ｱﾉｰﾄﾞ Anode	1	1	
19-49	910103-5635	ﾎﾞﾙﾄ Bolt	1	1	

ﾌﾞﾗｹｯﾄ (2) ﾊﾟﾜｰﾄﾘﾑ & ﾁﾙﾄ (新)

Fig.20 BRACKET (2) POWER TRIM & TILT (New)

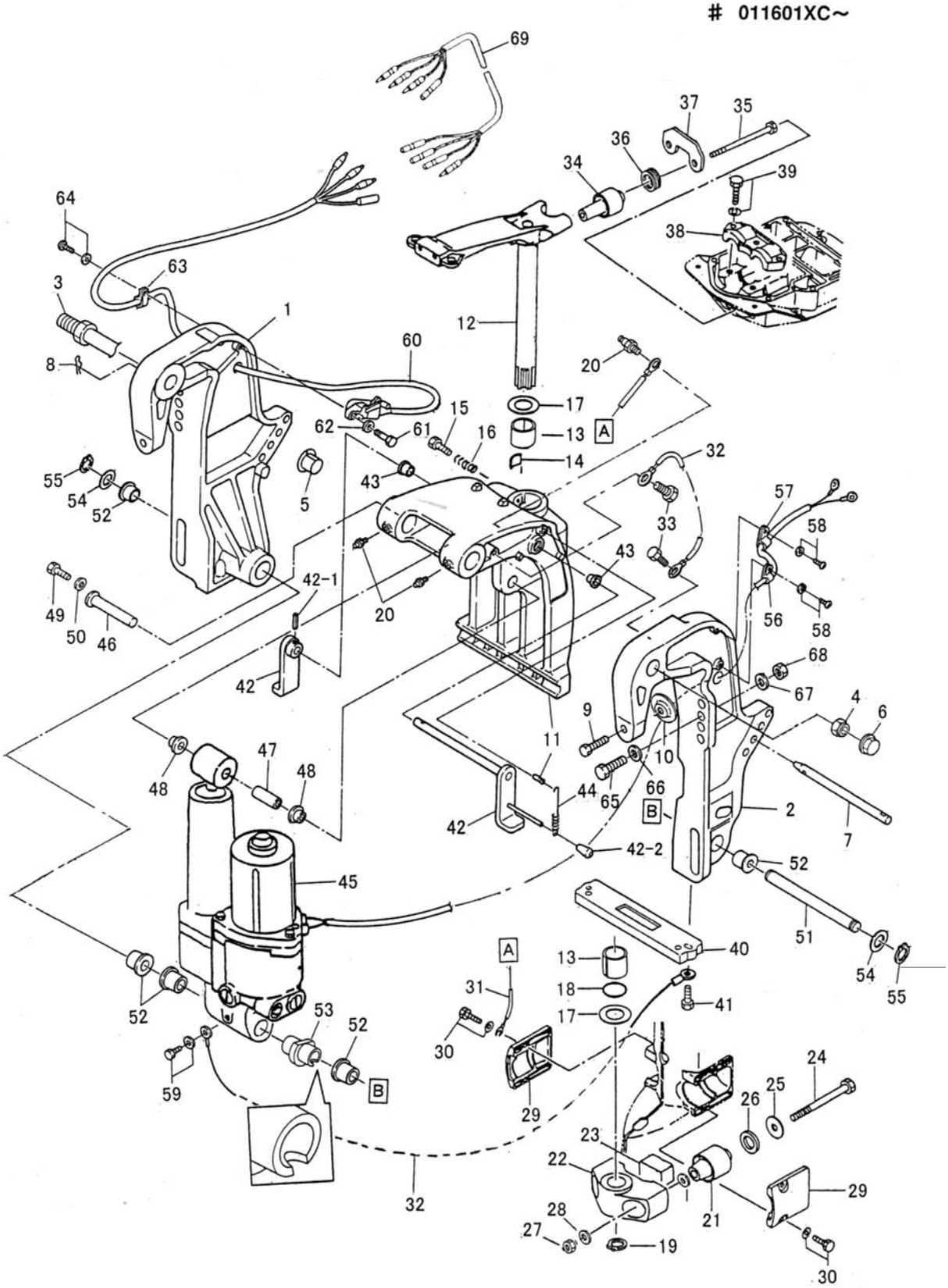

見出番号 Ref. No.	部品番号 Part No.	部　品　名 Description	個数 Q'ty D 50 B	個数 Q'ty D 40 B	備　考 Remarks
20-1	3Z5Q77211-0	ｸﾗﾝﾌﾟﾌﾞﾗｹｯﾄ (ﾗｲﾄ) Clamp Bracket (Right)	1	1	Stern Bracket (Right) Starboard
20-2	3Z5Q77212-0	ｸﾗﾝﾌﾟﾌﾞﾗｹｯﾄ (ﾚﾌﾄ) Clamp Bracket (Left)	1	1	Stern Bracket (Left) Port
20-3	3AD-62191-0	ｽｲﾍﾞﾙﾌﾞﾗｹｯﾄｼｬﾌﾄ Swivel Bracket Shaft	1	1	Bracket Bolt or 3Z5-62191-0
20-4	346-62124-1	ﾅｲﾛﾝﾅｯﾄ、7/8 Nylon Nut, 7/8	1	1	
20-5	3C8-77213-0	ﾌﾞﾗｹｯﾄｼｬﾌﾄﾌﾞｯｼﾝｸﾞ Bracket Shaft Bushing	2	2	
20-6	346-62127-0	ﾌﾞﾗｹｯﾄｼｬﾌﾄｷｬｯﾌﾟ Bracket Shaft Cap	2	2	for “F” Type
20-7	3R0-77118-0	ｽﾗｽﾄﾛｯﾄﾞ Thrust Rod	1	1	
20-8	951603-1000	ｽﾅｯﾌﾟﾋﾟﾝ、d=10 Snap Pin, d=10	1	1	
20-9	3C8-77214-0	ｸﾗﾝﾌﾟｽｸﾘｭ Clamp Screw	2	2	
20-10	332-62101-0	ｸﾗﾝﾌﾟｽｸﾘｭﾊﾟｯﾄﾞ Clamp Screw Pad	2	2	
20-11	3Z5Q77215-0	ｽｲﾍﾞﾙﾌﾞﾗｹｯﾄ (ﾊﾟﾜｰﾄﾘﾑ & ﾁﾙﾄ) Swivel Bracket (Power Trim & Tilt)	1	1	
20-12	3Z5Q62010-0	ｽﾃｱﾘﾝｸﾞｼｬﾌﾄ Steering Shaft	1	1	
20-13	353-62417-0	ﾌﾞｯｼﾝｸﾞ、30-36-41 Bushing, 30-36-41	2	2	
20-14	345-62441-0	ﾌﾘｸｼｮﾝﾌﾟﾚｰﾄ Friction Plate	1	1	
20-15	910113-0830	ﾎﾞﾙﾄ Bolt	1	1	
20-16	346-62421-1	ﾌﾘｸｼｮﾝﾌﾟﾚｰﾄｽﾌﾟﾘﾝｸﾞ Friction Plate Spring	1	1	
20-17	353-62423-1	ｽﾗｽﾄﾌﾟﾚｰﾄ Thrust Plate	2	2	
20-18	353-62415-0	O ﾘﾝｸﾞ、3.5-29.7 O-Ring, 3.5-29.7	1	1	
20-19	945103-2800	C ﾘﾝｸﾞ、d=28 C-Ring, d=28	1	1	
20-20	344-67177-0	ｸﾞﾘｽﾆｯﾌﾟﾙ Grease Fitting	3	3	
20-21	3C8-61302-0	ﾗﾊﾞｰﾏｳﾝﾄ (ﾛﾜ) Rubber Mount (Lower)	2	2	
20-22	3Z5Q61411-0	ﾏｳﾝﾄﾌﾞﾗｹｯﾄ Mount Bracket	1	1	
20-23	3C8-61336-0	ﾀﾞﾝﾊﾟ (ﾛﾜ) Damper (Lower)	1	1	
20-24	3C8-61321-1	ﾗﾊﾞｰﾏｳﾝﾄﾎﾞﾙﾄ (ﾛﾜ) Rubber Mount Bolt (Lower)	2	2	
20-25	353-61334-0	ﾜｯｼｬ、13-34-3 Washer, 13-34-3	2	2	
20-26	3C7-61338-0	ﾗﾊﾞｰﾀﾞﾝﾊﾟ、21-36-5 Rubber Damper, 21-36-5	2	2	
20-27	930403-1200	ﾅｲﾛﾝﾅｯﾄ、12-P1.75 Nylon Nut, 12-P1.75	2	2	
20-28	940213-1200	ﾜｯｼｬ Washer	4	4	
20-29	3C8Q61342-0	ﾏｳﾝﾄﾎｰﾙﾃﾞｨﾝｸﾞﾌﾟﾚｰﾄ (ﾛﾜ) Mount Holding Plate (Lower)	2	2	ﾗﾊﾞｰﾏｳﾝﾄｷｬｯﾌﾟ (ﾛﾜ) Rubber Mount Cap (Lower)
20-30	910113-5620	ﾎﾞﾙﾄ Bolt	4	4	

ﾌﾞﾗｹｯﾄ (2) ﾊﾟﾜｰﾄﾘﾑ & ﾁﾙﾄ (新)

Fig.20 BRACKET (2) POWER TRIM & TILT (New)

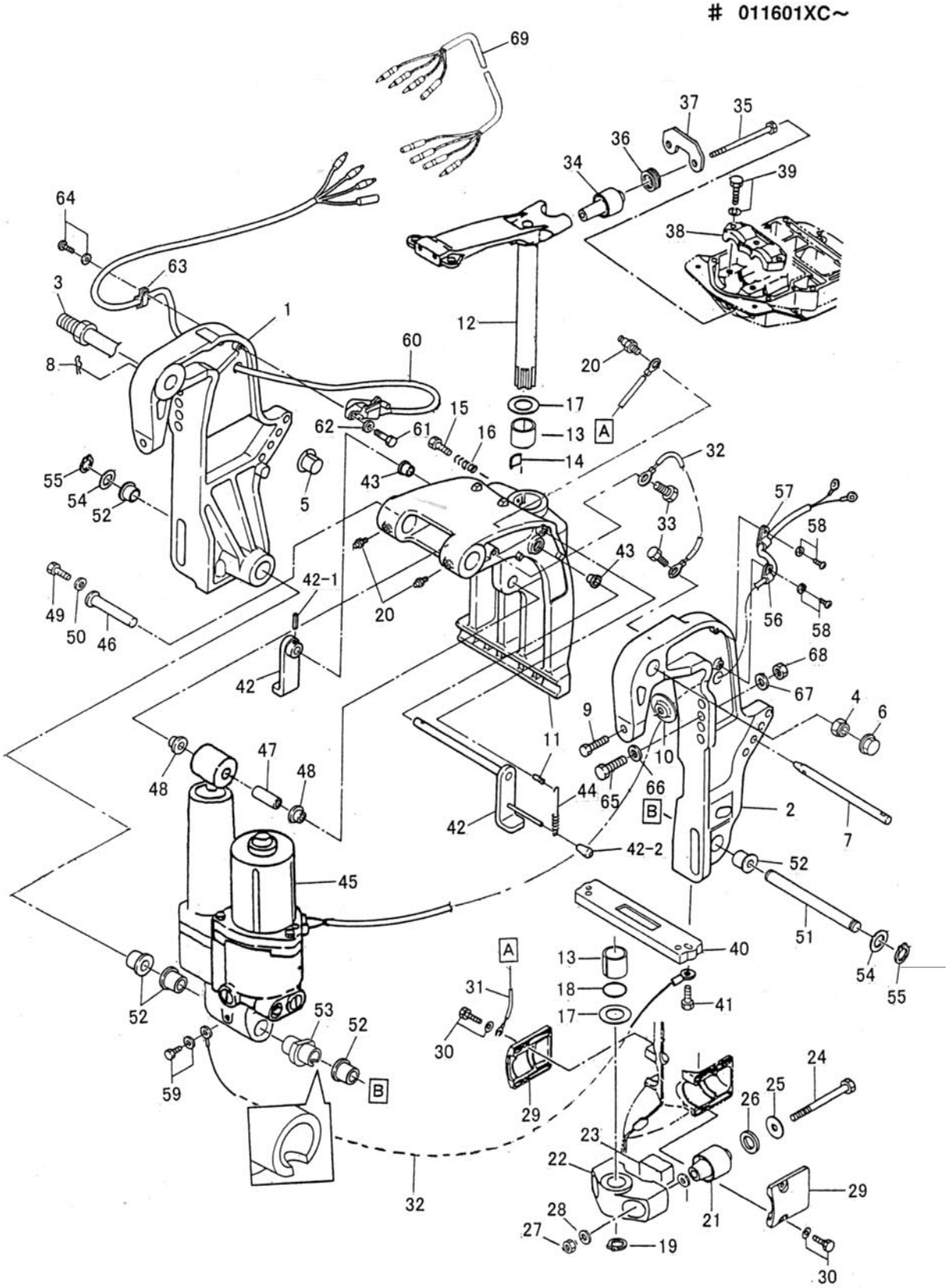

見出番号 Ref. No.	部品番号 Part No.	部　品　名 Description	個数 Q'ty D 50 B	個数 Q'ty D 40 B	備　考 Remarks
20-31	3C8-62396-1	ｱｰｽﾜｲﾔ Ground Cable	1	1	L=210
20-32	398-62396-1	ｱｰｽﾜｲﾔ Ground Cable	2	2	L=130
20-33	910113-5612	ﾎﾞﾙﾄ Bolt	2	2	
20-34	3E3-61301-1	ﾗﾊﾞｰﾏｳﾝﾄ (ｱｯﾊﾟ) Rubber Mount (Upper)	2	2	
20-35	353-61307-0	ﾗﾊﾞｰﾏｳﾝﾄﾎﾞﾙﾄ (ｱｯﾊﾟ) Rubber Mount Bolt (Upper)	2	2	
20-36	3E3-61333-0	ﾀﾞﾊﾟｰ (ｱｯﾊﾟ) Damper (Upper)	2	2	
20-37	3E3-61335-0	ﾛｯｸﾌﾟﾚｰﾄ (ｱｯﾊﾟ) Lock Plate (Upper)	1	1	
20-38	3C8Q61341-0	ﾏｳﾝﾄﾎｰﾙﾃﾞｨﾝｸﾞﾌﾟﾚｰﾄ (ｱｯﾊﾟ) Mount Holding Plate (Upper)	1	1	ﾗﾊﾞｰﾏｳﾝﾄｷｬｯﾌﾟ (ｱｯﾊﾟ) Rubber Mount Cap (Upper)
20-39	910113-5835	ﾎﾞﾙﾄ Bolt	3	3	
20-40	3C7-60218-2	ｱﾉｰﾄﾞ Anode	1	1	
20-41	910103-6630	ﾎﾞﾙﾄ Bolt	2	2	
20-42	3Z5Q62470-1	ﾁﾙﾄｽﾄｯﾊﾟ (PTT) Tilt Stopper (PTT)	1	1	
20-42-1	951403-3516	ｽﾌﾟﾘﾝｸﾞﾋﾟﾝ、3.5-16 * Spring Pin, 3.5-16	1	1	
20-42-2	369-62433-1	ﾁﾙﾄｽﾄｯﾊﾟｸﾞﾘｯﾌﾟ * Tilt Stopper Grip	1	1	
20-43	353-63207-0	ｶﾗｰ、10.2-12-12 Collar, 10.2-12-12	2	2	
20-44	3R0-62473-0	ﾁﾙﾄｽﾄｯﾊﾟｽﾌﾟﾘﾝｸﾞ (PTT) Tilt Stopper Spring (PTT)	1	1	
20-45	3Z5Q77150-0	ﾊﾟﾜｰﾄﾘﾑ & ﾁﾙﾄ Power Trim & Tilt	1	1	
20-46	3R0-77071-0	ｼﾘﾝﾀﾞﾋﾟﾝ (ｱｯﾊﾟ) Cylinder Pin (Upper)	1	1	
20-47	3R0-77075-0	ﾌﾞｯｼﾝｸﾞ、13-16-40 Bushing, 13-16-40	1	1	
20-48	3R0-77076-0	ﾌﾞｯｼﾝｸﾞ、13-17-19.5 Bushing, 13-17-19.5	2	2	
20-49	910113-0612	ﾎﾞﾙﾄ Bolt	1	1	
20-50	345-05122-0	ﾜｯｼｬ、6.5-23-1.5 Washer, 6.5-23-1.5	1	1	
20-51	3R0-77101-0	ｼﾘﾝﾀﾞﾋﾟﾝ (ﾛﾜ) Cylinder Pin (Lower)	1	1	
20-52	3C8-77076-1	ﾌﾞｯｼﾝｸﾞ、18-24-22 Bushing, 18-24-22	5	5	
20-53	3Z5-77103-0	ﾌﾞｯｼﾝｸﾞ、18-24-60 Bushing, 18-24-60	1	1	
20-54	3R0-77112-0	ﾜｯｼｬ、18.2-34-1 Washer, 18.2-34-1	2	2	
20-55	945103-1800	C ﾘﾝｸﾞ、d=18 C-Ring, d=18	2	2	
20-56	336-06973-0	ｸﾗﾝﾌﾟ、6-9.5L Clamp, 6-9.5L	1	1	
20-57	345-06915-0	ｸﾗﾝﾌﾟ、6-14L Clamp, 6-14L	1	1	
20-58	921503-5612	ｽｸﾘｭ Screw	2	2	

ﾌﾞﾗｹｯﾄ (2) ﾊﾟﾜｰﾄﾘﾑ & ﾁﾙﾄ (新)

Fig.20 BRACKET (2) POWER TRIM & TILT (New)

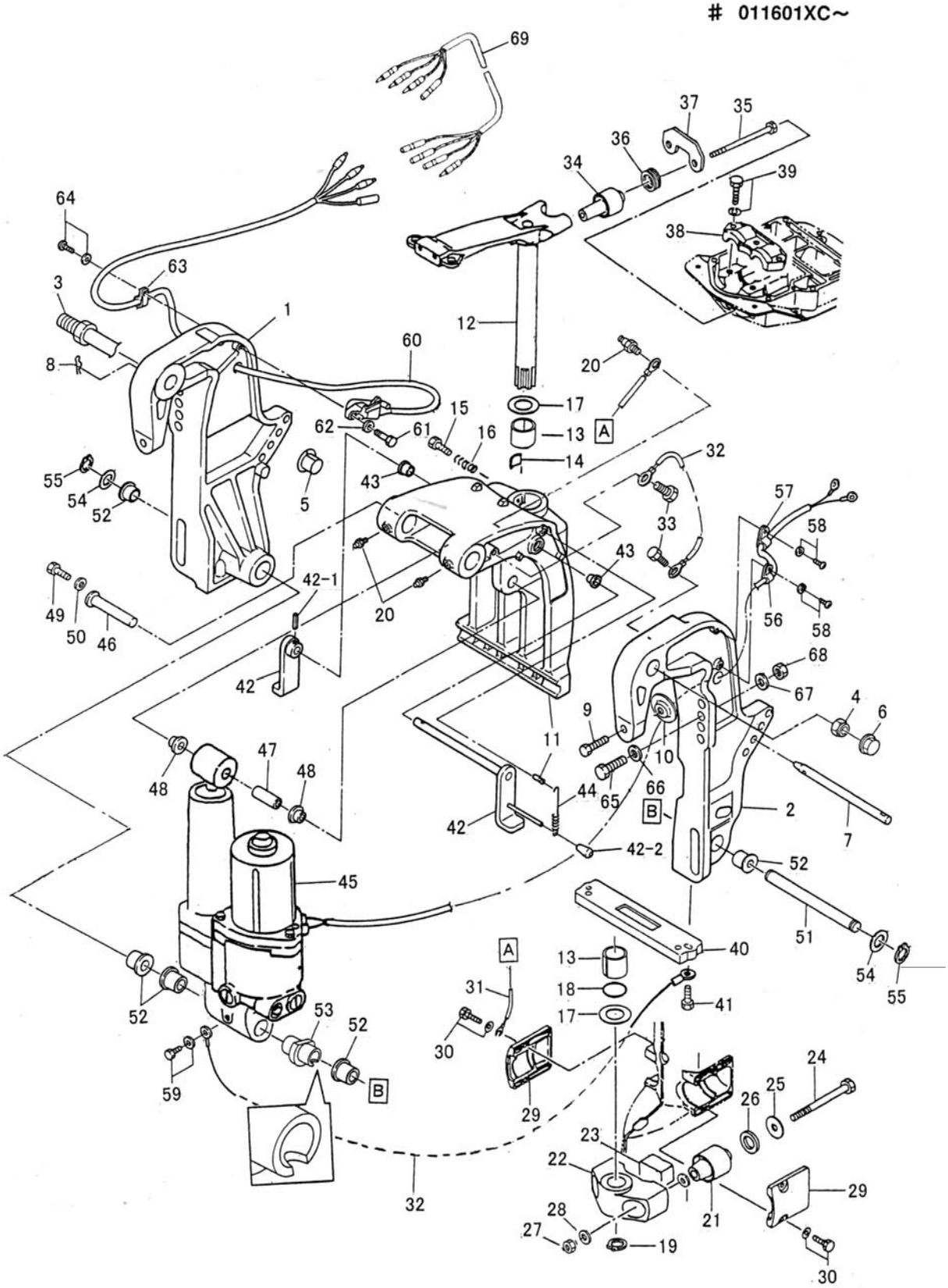

見出番号 Ref. No.	部品番号 Part No.	部　品　名 Description	個数 Q'ty D 50 B	個数 Q'ty D 40 B	備　考 Remarks
20-59	910113-5612	ﾎﾞﾙﾄ Bolt	1	1	
20-60	3Z5-72574-0	ﾄﾘﾑｾﾝｻ Trim Sensor	1	1	L=1700
20-61	910113-0620	ﾎﾞﾙﾄ Bolt	2	2	
20-62	3R0-66308-0	ﾜｯｼｬ、6-16-1.5 Washer, 6-16-1.5	2	2	P ﾀｲﾌﾟ for "P" Type
20-63	336-06973-0	ｸﾗﾝﾌﾟ、6-9.5L Clamp, 6-9.5L	1	1	
20-64	921503-5612	ｽｸﾘｭ Screw	1	1	
20-65	3C7-62133-2	ﾎﾞﾙﾄ、12-P1.25 Bolt, 12-P1.25	4	4	L=105
20-66	353-61334-0	ﾜｯｼｬ、13-34-3 Washer, 13-34-3	4	4	
20-67	940113-1200	ﾜｯｼｬ Washer	4	4	or 940103-1200
20-68	3C7-62139-1	ﾅｯﾄ、12-P1.25 Nut, 12-P1.25	4	4	
20-69	3F3-72573-1	ｴｸｽﾃﾝｼｮﾝｺｰﾄﾞ（ﾄﾘﾑｾﾝｻ） Extension Cord (Trim Sensor)	1	1	for "P" Type L=6000

マニュアルチルト（M タイプ）
Fig.21 MANUAL TILT (M Type)

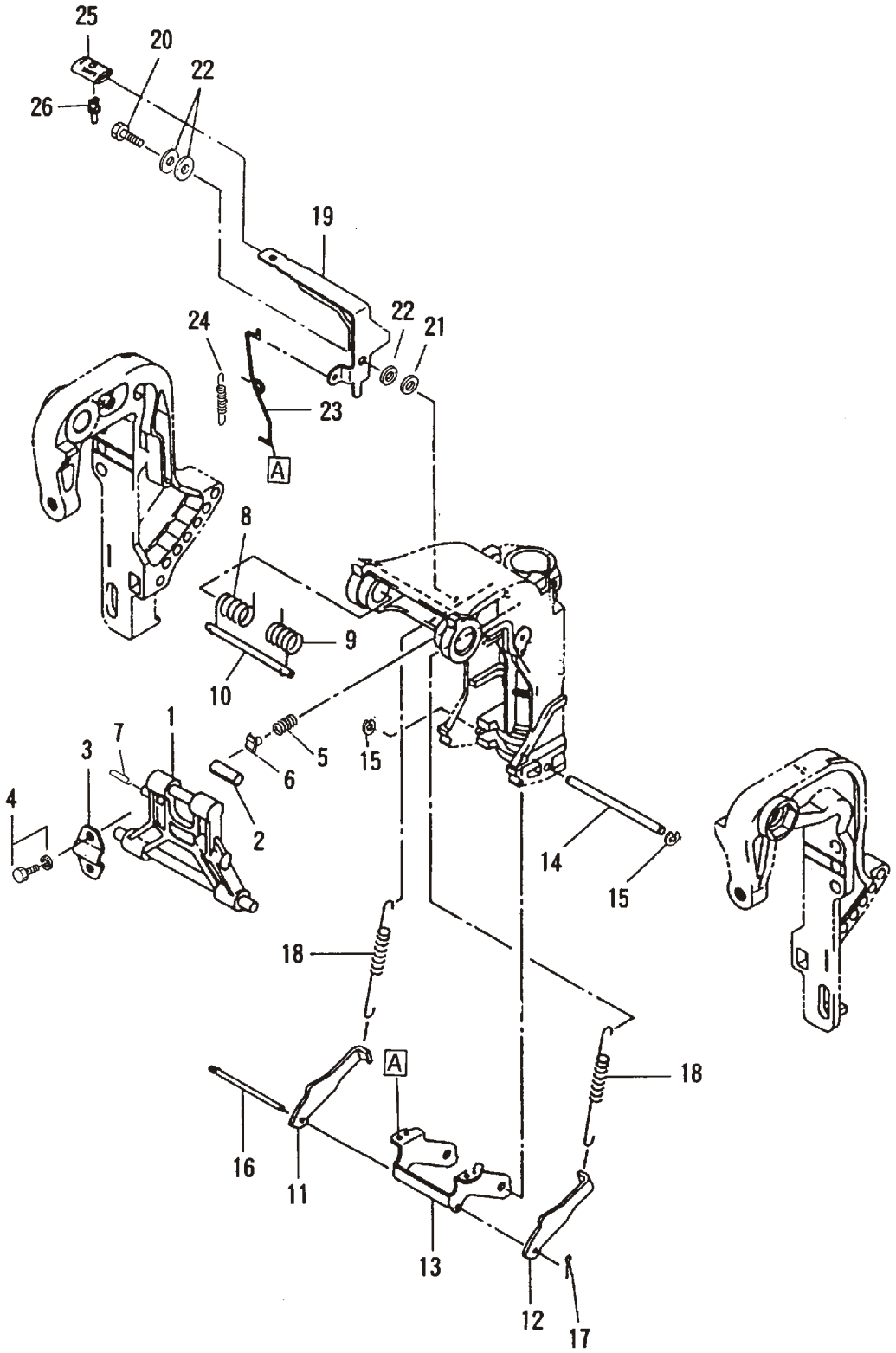

見出番号 Ref. No.	部品番号 Part No.	部　品　名 Description	個数 Q'ty D 50 B	個数 Q'ty D 40 B	備　考 Remarks
21-1	3C8Q62993-2	ﾁﾙﾄｽﾄｯﾊﾟ Tilt Stopper	1	1	# 043187XC～
21-2	346-62437-0	ﾌﾞｯｼﾝｸﾞ、10.2-12-29.5 Bushing, 10.2-12-29.5	1	1	
21-3	346-62439-1	ﾁﾙﾄｽﾄｯﾊﾟｾｯﾄﾌﾟﾚｰﾄ Tilt Stopper Setting Plate	1	1	
21-4	910113-5820	ﾎﾞﾙﾄ Bolt	2	2	
21-5	3C8-62421-1	ﾌﾘｸｼｮﾝﾌﾟﾚｰﾄｽﾌﾟﾘﾝｸﾞ Friction Plate Spring	1	1	
21-6	346-62438-0	ｾｯﾄﾋﾟｰｽ Set Piece	1	1	
21-7	951403-0425	ｽﾌﾟﾘﾝｸﾞﾋﾟﾝ、4-25 Spring Pin, 4-25	1	1	
21-8	3E3-62141-0	ﾁﾙﾄｱｼｽﾀﾝﾄｽﾌﾟﾘﾝｸﾞ R Tilt Assistant Spring “R”	1	1	Old Part No. 3C8-62142-0 for Transom “UL”
21-9	3E3-62142-0	ﾁﾙﾄｱｼｽﾀﾝﾄｽﾌﾟﾘﾝｸﾞ L Tilt Assistant Spring “L”	1	1	Old Part No. 3C8-62141-0 for Transom “UL”
21-10	3C8-62143-0	ﾁﾙﾄｱｼｽﾀﾝﾄｼｬﾌﾄ Tilt Assistant Shaft	1	1	for Transom “UL”
21-11	3C8-66352-2	ﾘﾊﾞｰｽﾛｯｸ L Reverse Lock “L”	1	1	
21-12	3C8-66351-2	ﾘﾊﾞｰｽﾛｯｸ R Reverse Lock “R”	1	1	
21-13	3C8-66313-4	ﾘﾊﾞｰｽﾛｯｸｱｰﾑ Reverse Lock Arm	1	1	
21-14	3C8-66319-1	ﾘﾊﾞｰｽﾛｯｸｼｬﾌﾄ Reverse Lock Shaft	1	1	
21-15	945303-0600	E ﾘﾝｸﾞ、d=6 E-Ring, d=6	2	2	
21-16	3C8-66321-0	ﾘﾊﾞｰｽﾛｯｸﾛｯﾄﾞ Reverse Lock Rod	1	1	
21-17	951503-0212	ｽﾌﾟﾘｯﾄﾋﾟﾝ、2-12 Sprit Pin, 2-12	1	1	
21-18	3C8-66331-2	ﾁﾙﾄｽﾄｯﾊﾟｽﾌﾟﾘﾝｸﾞ S Tilt Stopper Spring “S”	2	2	for Transom “S”
	3C8-66332-2	ﾁﾙﾄｽﾄｯﾊﾟｽﾌﾟﾘﾝｸﾞ L Tilt Stopper Spring “L”	2	2	for Transom “L” & “UL”
21-19	3E3-62436-0	ﾁﾙﾄｽﾄｯﾊﾟﾚﾊﾞｰ Tilt Stopper Lever	1	1	
21-20	3C8-66314-3	ｼｬﾌﾄ Shaft	1	1	
21-21	3R0-66308-0	ﾜｯｼｬ、6-16-1.5 Washer, 6-16-1.5	1	1	
21-22	940113-0800	ﾜｯｼｬ Washer	3	3	
21-23	3C8-66318-1	ﾘﾝｸ B Link “B”	1	1	
21-24	3C8-66336-0	ｽﾌﾟﾘﾝｸﾞ B Spring “B”	1	1	
21-25	346-66333-0	ﾘﾊﾞｰｽﾛｯｸﾚﾊﾞｰｸﾞﾘｯﾌﾟ Reverse Lock Lever Grip	1	1	
21-26	346-66334-0	ﾚﾊﾞｰｸﾞﾘｯﾌﾟｽﾄｯﾊﾟ Lever Grip Stopper	1	1	

パワートリム & チルト (新)
Fig.22 POWER TRIM & TILT (New)

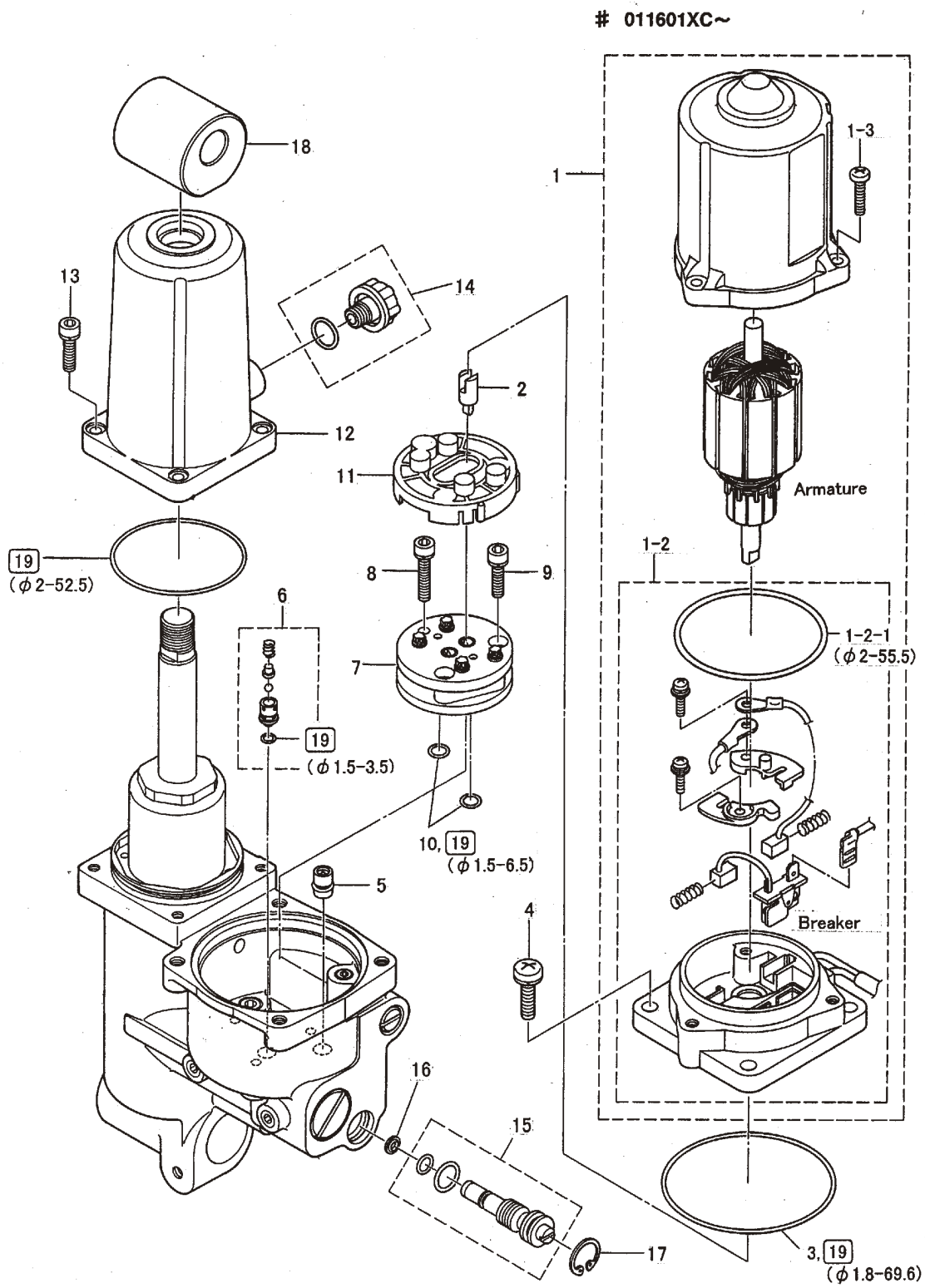

見出番号 Ref. No.	部品番号 Part No.	部　品　名 Description	個数 Q'ty D 50 B	個数 Q'ty D 40 B	備　考 Remarks
22-1	3Z5-77180-0	ﾓｰﾀ Motor	1	1	L=1050
22-1-2	3Z5-77192-0	ﾓｰﾀﾌﾞﾗｹｯﾄｱｯｼ ＊ Motor Bracket Ass'y	1	1	
22-1-2-1	3Z5-77182-0	O ﾘﾝｸﾞ、2-55.5 ＊ O-Ring, 2-55.5	1	1	
22-1-3	921503-0520	ｽｸﾘｭ ＊ Screw	3	3	
22-2	3Z5-77166-0	ｶｯﾌﾟﾘﾝｸﾞ Coupling	1	1	
22-3	3B7-77167-0	O ﾘﾝｸﾞ、1.8-69.6 O-Ring, 1.8-69.6	1	1	
22-4	3Z5-77194-0	ｽｸﾘｭ Screw	4	4	
22-5	3Z5-77460-0	ﾊﾞﾙﾌﾞｱｯｼ Valve Ass'y	1	1	
22-6	3Z5-77450-0	ﾘﾘｰﾌﾊﾞﾙﾌﾞｱｯｼ Relief Valve Ass'y	1	1	
22-7	3B7-77430-0	ﾎﾟﾝﾌﾟ Pump	1	1	
22-8	3B7-77431-1	ﾎﾞﾙﾄ Bolt	1	1	
22-9	3B7-77432-1	ﾎﾞﾙﾄ Bolt	2	2	
22-10	3B7-77433-0	O ﾘﾝｸﾞ、1.5-6.5 O-Ring, 1.5-6.5	2	2	
22-11	3B7-77434-1	ﾌｨﾙﾀ Filter	1	1	
22-12	3Z5-77165-0	ﾘｻﾞｰﾌﾞﾀﾝｸ Reservoir Tank	1	1	
22-13	3Z5-77159-0	ﾎﾞﾙﾄ Bolt	4	4	
22-14	3Z5-77221-0	ｷｬｯﾌﾟｱｯｼ Cap Ass'y	1	1	
22-15	3Z5-77175-0	ﾏﾆｭｱﾙﾊﾞﾙﾌﾞｱｯｼ Manual Valve Ass'y	1	1	
22-16	3R0-77173-0	ｼｰﾙﾜｯｼｬ Seal Washer	1	1	
22-17	3Z5-77171-0	C ﾘﾝｸﾞ C-Ring	1	1	
22-18	3Z5-77367-0	ｼﾞｮｲﾝﾄﾒﾀﾙ Joint Metal	1	1	
22-19	3Z5-77225-0	O ﾘﾝｸﾞｾｯﾄ O-Ring Set	1 set	1 set	

ﾎﾞﾄﾑｶｳﾙ (ﾓｰﾀｰｶﾊﾞｰﾛﾜ)

Fig.23 BOTTOM COWL (MOTOR COVER LOWER)

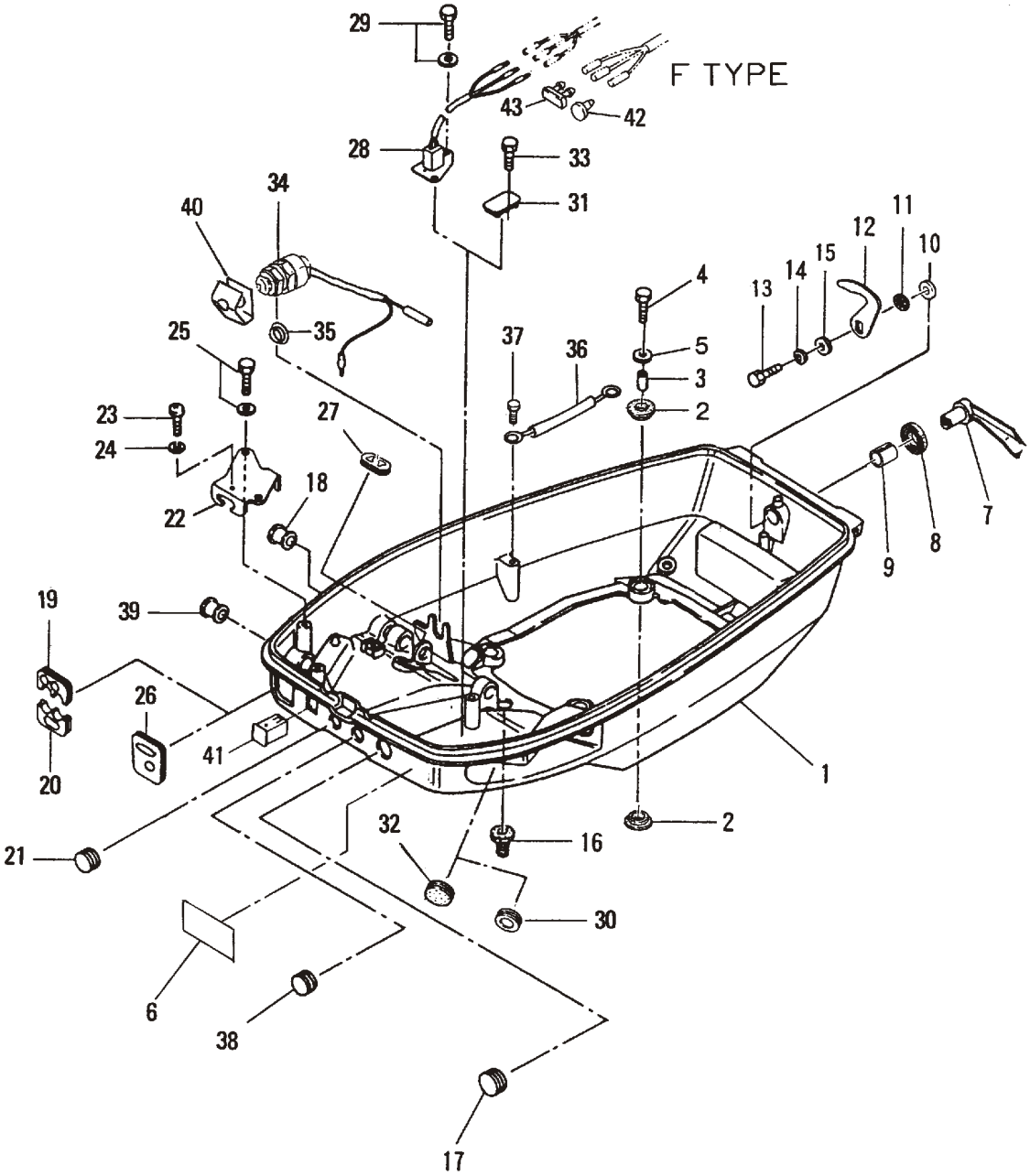

見出番号 Ref. No.	部品番号 Part No.	部　品　名 Description	個数 Q'ty D 50 B	D 40 B	備　考 Remarks
23-1	3C8Q67100-0	ﾎﾞﾄﾑｶｳﾙ Bottom Cowl	1	1	ﾓｰﾀｶﾊﾞｰ (ﾛﾜ) Motor Cover (Lower)
23-2	346-67113-0	ﾗﾊﾞｰﾏｳﾝﾄ、8.5-14-2.5 Rubber Mount, 8.5-14-2.5	8	8	
23-3	346-67114-0	ｽﾍﾟｰｻ、6.2-9-15.7 Spacer, 6.2-9-15.7	4	4	
23-4	910113-0630	ﾎﾞﾙﾄ Bolt	4	4	
23-5	346-67115-0	ﾜｯｼｬ、6.5-21-1 Washer, 6.5-21-1	4	4	
23-6	3T5-72057-0	PTT ｽｲｯﾁﾃﾞｶﾙ PTT Switch Decal	1	1	for “P” Type
23-7	3C8Q67141-0	ﾌｯｸﾚﾊﾞｰ Hook Lever	1	1	
23-8	338-67147-0	ﾌｯｸﾚﾊﾞｰｼｰﾙﾘﾝｸﾞ Hook Lever Seal Ring	1	1	
23-9	369-67105-0	ﾌｯｸﾚﾊﾞｰﾌﾞｯｼﾝｸﾞ Hook Lever Bushing	1	1	
23-10	3C8-67146-0	ﾜｯｼｬ、14-22-1 Washer, 14-22-1	1	1	
23-11	941403-1400	ｳｪｰﾌﾞﾜｯｼｬ、d=14 Wave Washer, d=14	1	1	
23-12	3C8-67142-1	ｶﾊﾞｰﾌｯｸ Cover Hook	1	1	
23-13	910114-0612	ﾎﾞﾙﾄ Bolt	1	1	
23-14	941303-0600	ｽﾌﾟﾘﾝｸﾞﾜｯｼｬ Spring Washer	1	1	
23-15	3R0-66308-0	ﾜｯｼｬ、6-16-1.5 Washer, 6-16-1.5	4	4	
23-16	345-66226-0	ｸﾞﾛﾒｯﾄ、17-3 Grommet, 17-3	1	1	
23-17	345-76092-0	ﾒｲﾝｽｲｯﾁｸﾞﾛﾒｯﾄ Main Switch Grommet	1	1	
23-18	3B7-01046-0	ﾌﾟﾗｸﾞ Plug	1	1	
23-19	3C8-83732-0	ﾘﾓｰﾄｺﾝﾄﾛｰﾙｹｰﾌﾞﾙｸﾞﾛﾒｯﾄ Remote Control Cable Grommet	1	1	for “P” Type
23-20	3C8-76116-1	ｺｰﾄﾞｸﾞﾛﾒｯﾄ Cord Grommet	1	1	
23-21	345-67117-0	ｸﾞﾛﾒｯﾄ、17-2.7 Grommet, 17-2.7	1	1	
23-22	3C8-83820-0	ﾘﾓｰﾄｺﾝﾄﾛｰﾙｹｰﾌﾞﾙﾌﾞﾗｹｯﾄ Remote Control Cable Bracket	1	1	
23-23	3C8-83821-0	ｽｸﾘｭ、4-20 P0.5 Screw, 4-20 P0.5	1	1	for “P” Type
23-24	941303-0400	ｽﾌﾟﾘﾝｸﾞﾜｯｼｬ Spring Washer	1	1	
23-25	910113-5616	ﾎﾞﾙﾄ Bolt	2	2	
23-26	3T5-67162-0	ﾊﾞｯﾃﾘｺｰﾄﾞｸﾞﾛﾒｯﾄ Battery Cable Grommet	1	1	for “F” Type
23-27	3C8-63621-0	ｽﾛｯﾄﾙﾜｲﾔｸﾞﾛﾒｯﾄ Throttle Cable Grommet	1	1	
	3C8-63624-0	ｽﾛｯﾄﾙﾎｰﾙｸﾞﾛﾒｯﾄ Throttle Hole Grommet	1	1	
23-28	3T5-72613-0	PTT ｽｲｯﾁ B PTT Switch “B”	1	1	for “P” Type
23-29	910113-5612	ﾎﾞﾙﾄ Bolt	2	2	

ﾎﾞﾄﾑｶｳﾙ（ﾓｰﾀｰｶﾊﾞｰﾛﾜ）

Fig.23 BOTTOM COWL (MOTOR COVER LOWER)

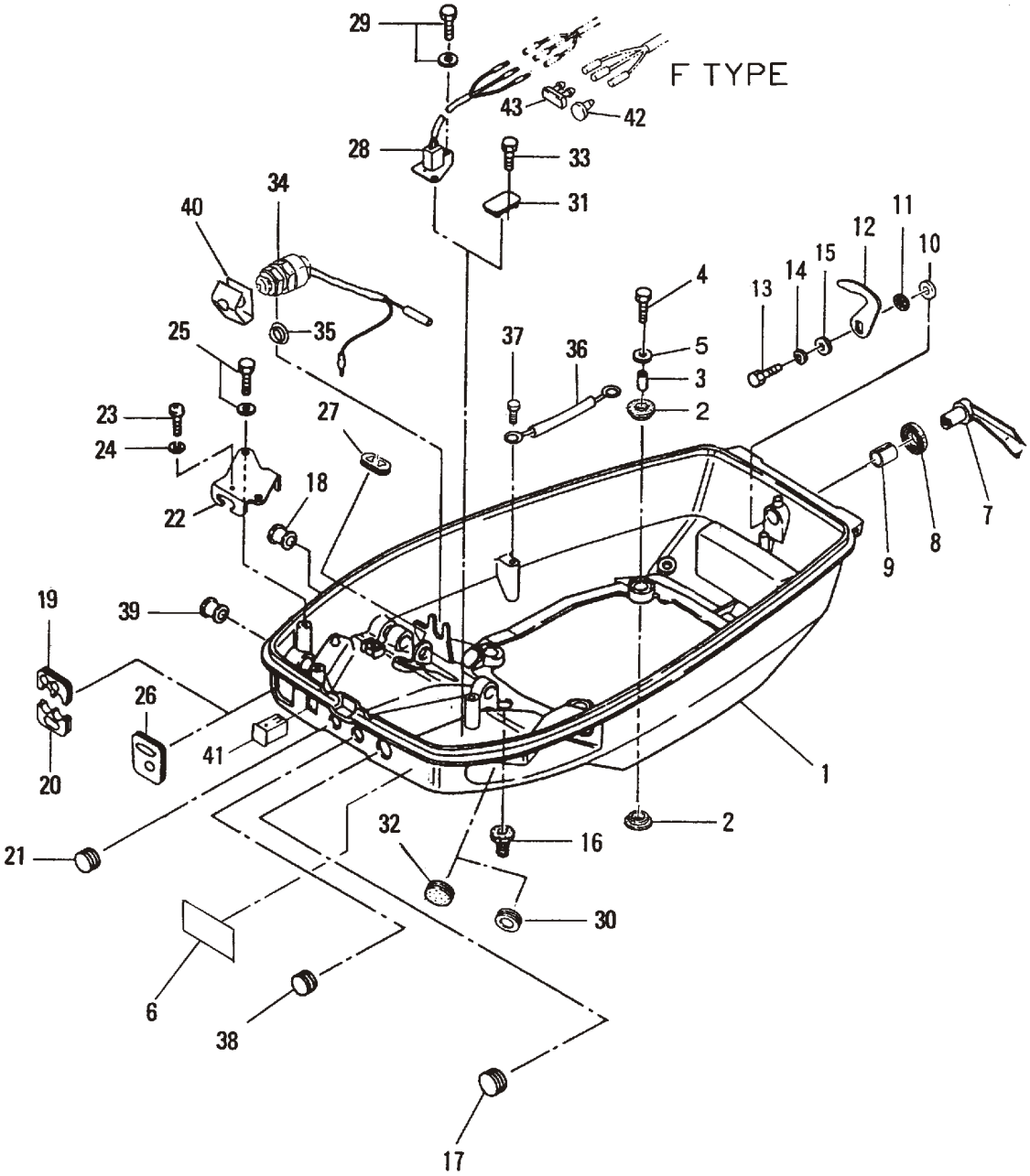

見出番号 Ref. No.	部品番号 Part No.	部　品　名 Description	個数 Q'ty D 50 B	個数 Q'ty D 40 B	備　考 Remarks
23-30	338-67163-0	ｸﾞﾛﾒｯﾄ、18-2.5 Grommet, 18-2.5	1	1	
23-31	3C8-72619-0	ｸﾞﾛﾒｯﾄ Grommet	1	1	for “F” Type
23-32	345-67117-0	ｸﾞﾛﾒｯﾄ、17-2.7 Grommet, 17-2.7	1	1	
23-33	910113-0610	ﾎﾞﾙﾄ Bolt	2	2	
23-34	398-76080-0	ﾆｭｰﾄﾗﾙｽｲｯﾁ Neutral Switch	1	1	for “F” Type
23-35	3B7-63731-0	ﾜｯｼｬ、12.5-24-1 Washer, 12.5-24-1	1	1	
23-36	3N4-76142-0	ｱｰｽﾜｲﾔ Ground Cable	1	1	L=270
23-37	910103-6612	ﾎﾞﾙﾄ Bolt	2	2	
23-38	345-67117-0	ｸﾞﾛﾒｯﾄ、17-2.7 Grommet, 17-2.7	1	1	
23-39	3B2-67187-0	ｸﾞﾛﾒｯﾄ Grommet	1	1	for “P” Type
23-40	398-76083-0	ﾆｭｰﾄﾗﾙｽｲｯﾁｱｸﾁｭｴｰﾀ Neutral Switch Actuator	1	1	for “F” Type
23-41	3T5-67150-0	ﾌﾟﾗｸﾞ Plug	1	1	
23-42	3A3-76037-0	ｹｰﾌﾞﾙﾀｰﾐﾅﾙﾌﾟﾗｸﾞ Cable Terminal Plug	1	1	for “F” Type
23-43	353-76037-0	ｹｰﾌﾞﾙﾀｰﾐﾅﾙﾌﾟﾗｸﾞ Cable Terminal Plug	1	1	

トップカウル（モーターカバーアッパ）
Fig.24 TOP COWL (MOTOR COVER UPPER)

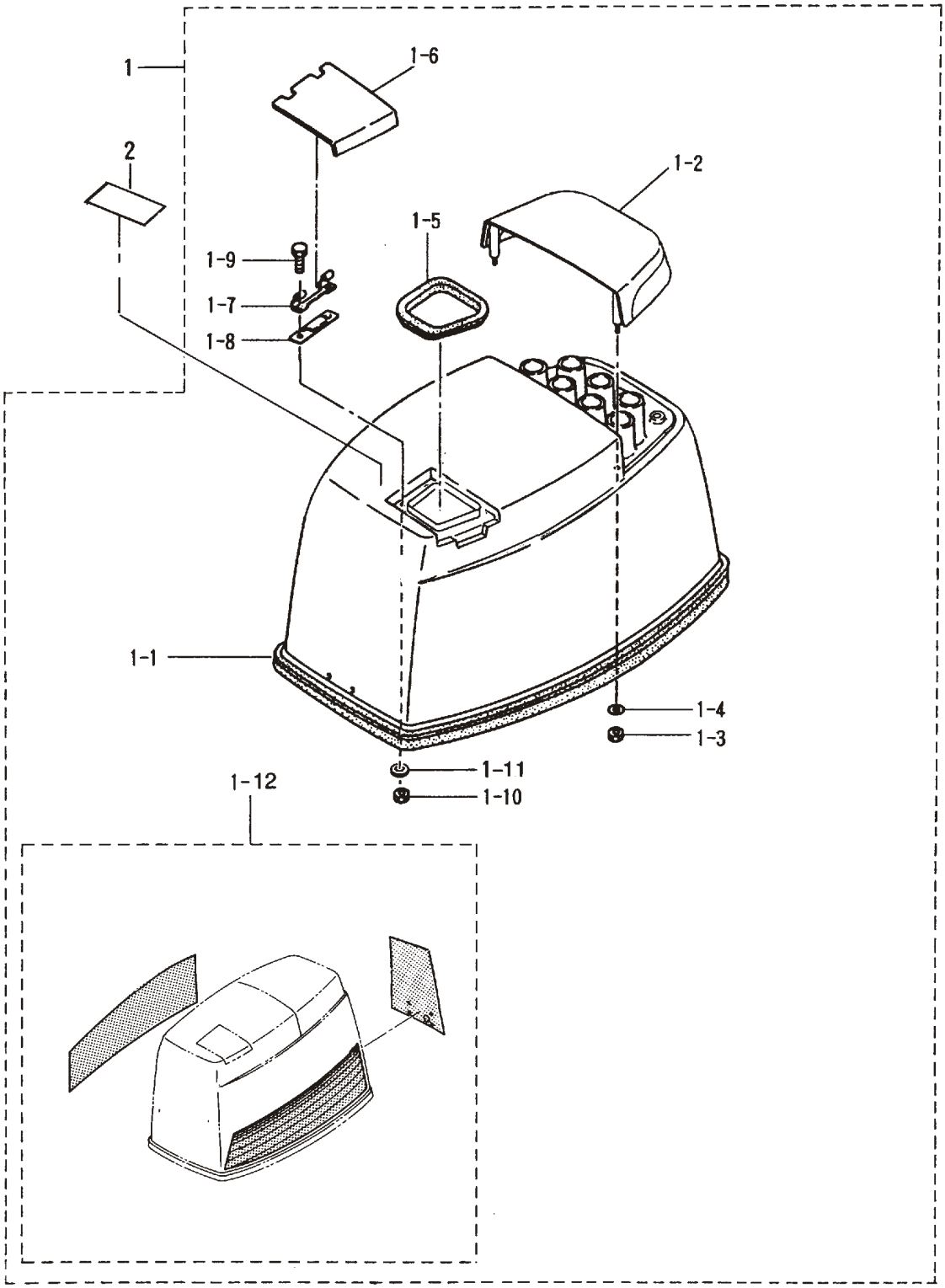

見出番号 Ref. No.	部品番号 Part No.	部　品　名 Description	個数 Q'ty D 50 B	個数 Q'ty D 40 B	備　考 Remarks
24-1	3T5Q67510-2	ﾄｯﾌﾟｶｳﾙ Top Cowl	1	1	Motor Cover (Upper) UNIQUE
24-1-1	3F3-67501-0	ﾄｯﾌﾟｶｳﾙｼｰﾙ ＊ Top Cowl Seal	1	1	
24-1-2	3E3Q67521-0	ﾁﾙﾄﾊﾝﾄﾞﾙ ＊ Tilt Handle	1	1	
24-1-3	930113-0600	ﾅｯﾄ ＊ Nut	4	4	
24-1-4	3R0-66308-0	ﾜｯｼｬ、6-16-1.5 ＊ Washer, 6-16-1.5	4	4	
24-1-5	3E3-67213-0	ﾌｨﾗﾘｯﾄﾞｼｰﾙ ＊ Filler Lid Seal	1	1	
24-1-6	3E3Q67210-0	ﾌｨﾗﾘｯﾄﾞ ＊ Filler Lid	1	1	
24-1-7	3B7-67211-0	ﾌｨﾗﾘｯﾄﾞﾋﾝｼﾞ ＊ Filler Lid Hinge	1	1	
24-1-8	3C8-67212-0	ﾌｨﾗﾘｯﾄﾞｽﾌﾟﾘﾝｸﾞ ＊ Filler Lid Spring	1	1	
24-1-9	910103-0614	ﾎﾞﾙﾄ ＊ Bolt	2	2	
24-1-10	930113-0600	ﾅｯﾄ ＊ Nut	2	2	
24-1-11	941303-0600	ｽﾌﾟﾘﾝｸﾞﾜｯｼｬ ＊ Spring Washer	2	2	
24-1-12	3Z5Q87802-0	ﾃﾞｶﾙｾｯﾄ ＊ Decal Set	1 set	-	UNIQUE
	3Z4Q87802-0	ﾃﾞｶﾙｾｯﾄ ＊ Decal Set	-	1 set	UNIQUE
24-2	3C7-72180-2	ｺｰｼｮﾝﾃﾞｶﾙ A Caution Decal “A”	1	1	

セパレートフュエルタンク
Fig.25 SEPARATE FUEL TANK

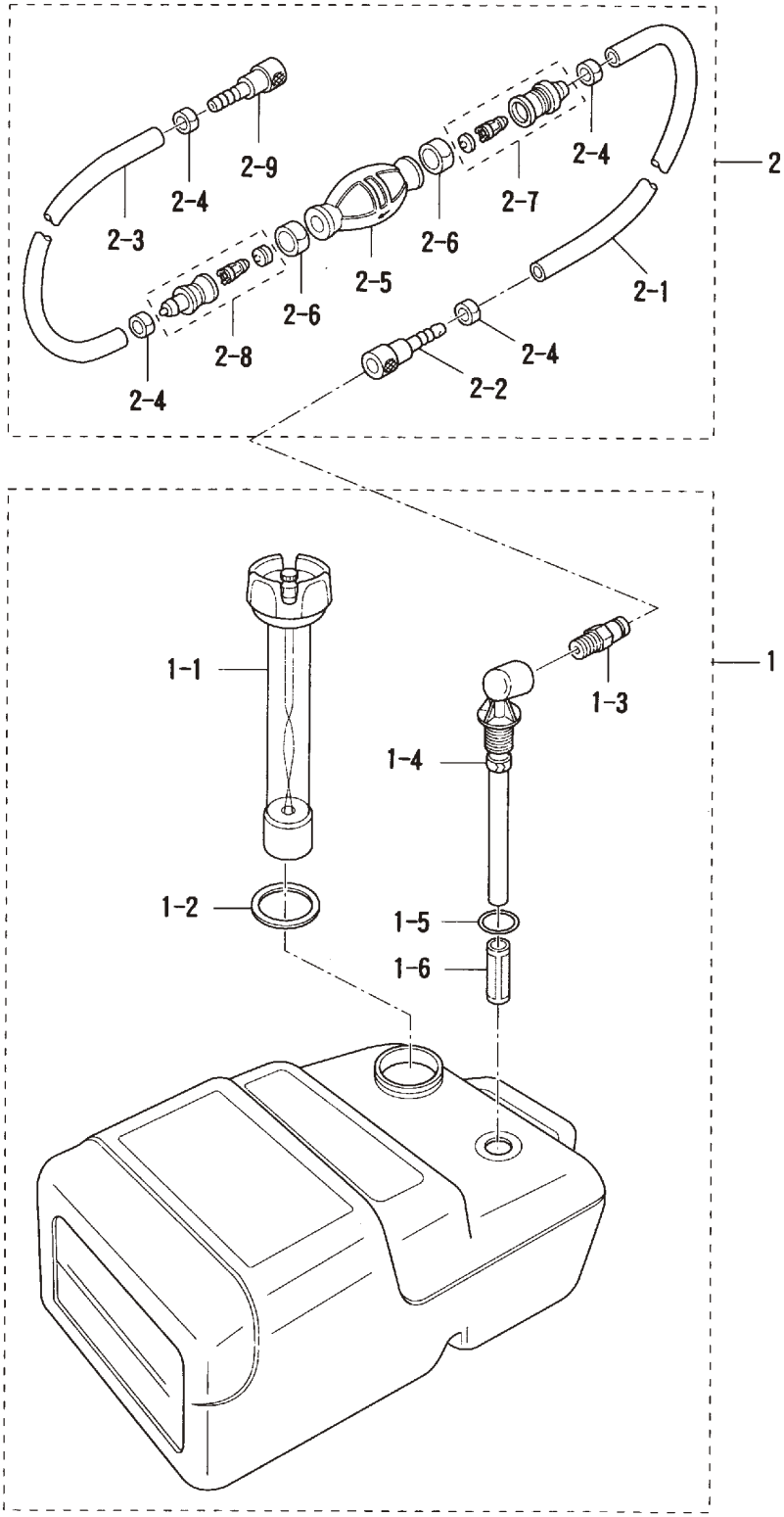

見出番号 Ref. No.	部品番号 Part No.	部　品　名 Description	個数 Q'ty D 50 B	個数 Q'ty D 40 B	備　考 Remarks
25-1	3C7-70177-0	ﾌｭｴﾙﾀﾝｸ (25L) Fuel Tank (25L)	1	1	UNIQUE
25-1-1	3C7-70050-0	ﾌｭｴﾙｹﾞｰｼﾞﾍﾞﾝﾃｨﾄﾞｷｬｯﾌﾟ * Fuel Gauge Vented Cap	1	1	
25-1-2	3C7-70021-0	ｷｬｯﾌﾟｶﾞｽｹｯﾄ * Cap Gasket	1	1	
25-1-3	3E0-70270-0	ﾒｲﾙｸｲｯｸｺﾈｸﾀ * Male Quick Connector	1	1	
25-1-4	3C7-70155-0	ﾌｭｴﾙﾋﾟｯｸｱｯﾌﾟｴﾙﾎﾞ * Elbow Tubing and Clamp Ass'y	1	1	
25-1-5	3C7-70199-0	O ﾘﾝｸﾞ * O-Ring	1	1	
25-1-6	3C7-70113-0	ﾌｨﾙﾀ * Filter	1	1	
25-2	3B7-70200-3	ﾌﾟﾗｲﾏﾊﾞﾙﾌﾞｱｯｼ Primer Bulb Ass'y	1	1	
25-2-1	98AB-7-1600	ﾌｭｴﾙﾊﾟｲﾌﾟ A * Fuel Pipe "A"	1	1	
25-2-2	3B2-70281-0	ﾌｭｴﾙｺﾈｸﾀ (ﾀﾝｸ、ﾌｨﾒｰﾙ) * Fuel Connector (Tank Side, Female)	1	1	
25-2-3	98AB-7-0700	ﾌｭｴﾙﾊﾟｲﾌﾟ B * Fuel Pipe "B"	1	1	
25-2-4	332-70201-0	ｸﾗﾝﾌﾟ * Clamp	4	4	
25-2-5	3C7-70211-0	ﾌﾟﾗｲﾏﾊﾞﾙﾌﾞ * Primer Bulb	1	1	
25-2-6	3C7-70217-0	ｸﾗﾝﾌﾟ * Clamp	2	2	
25-2-7	3C7-70220-1	ｼﾞｮｲﾝﾄｱｯｼ (IN) * Joint Ass'y (Inlet)	1	1	
25-2-8	3C7-70224-1	ｼﾞｮｲﾝﾄｱｯｼ (OUT) * Joint Ass'y (Outlet)	1	1	
25-2-9	3B2-70250-1	ﾌｭｴﾙｺﾈｸﾀ (ｴﾝｼﾞﾝ、ﾌｨﾒｰﾙ) * Fuel Connector (Engine Side, Female)	1	1	

アクセサリー
Fig.26 ACCESSORIES

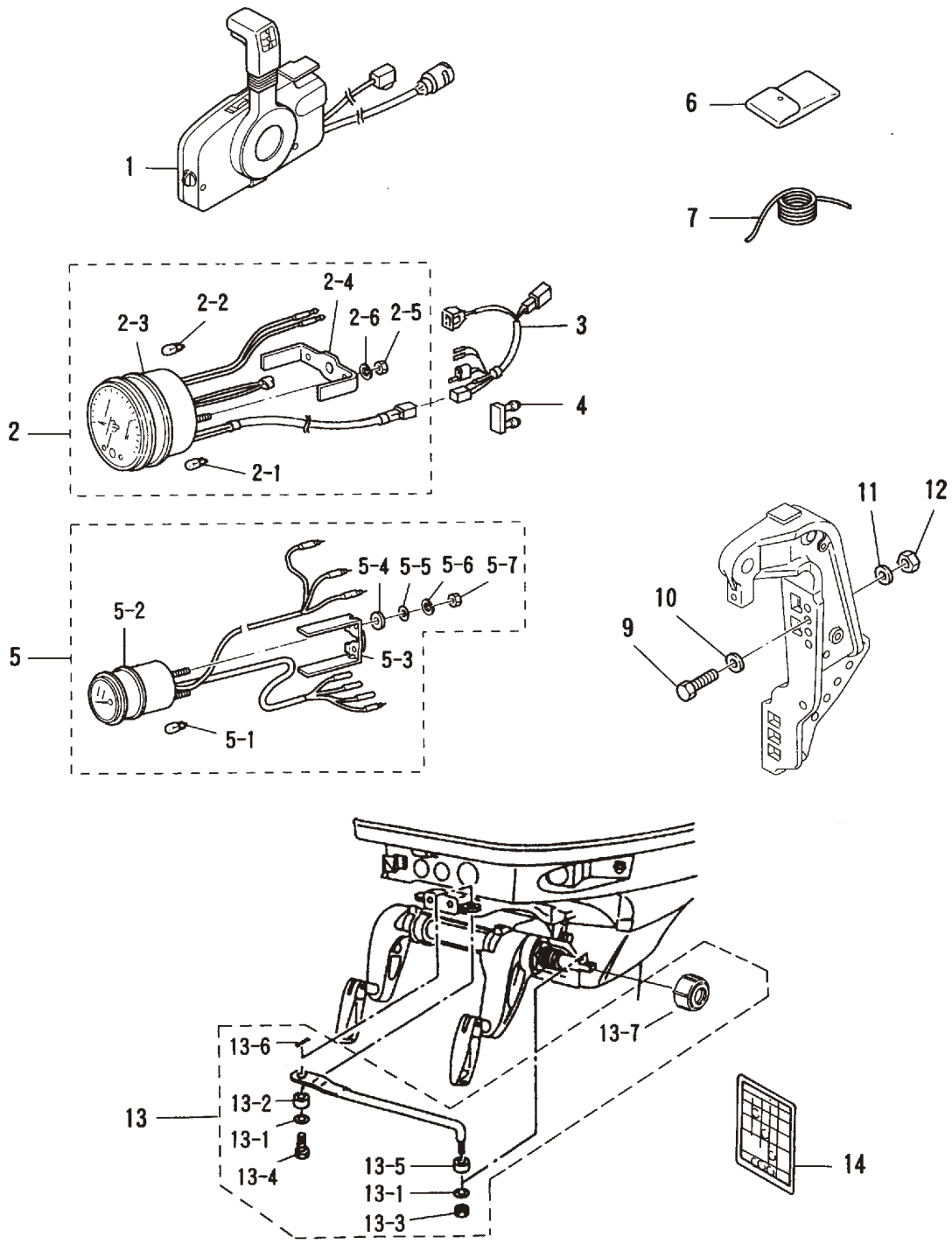

見出番号 Ref. No.	部品番号 Part No.	部　品　名 Description	個数 Q'ty D 50 B	個数 Q'ty D 40 B	備　考 Remarks
26-1	3T5Q84500-1	ﾘﾓｰﾄｺﾝﾄﾛｰﾙﾎﾞｯｸｽ（RC5F） Remote Control Box（RC5F）	1	1	UNIQUE
26-2	3Z5-72640-1	ﾀｺﾒｰﾀ Tachometer	1	1	
26-2-1	3B7-72658-0	＊ ｵｲﾙﾊﾞﾙﾌﾞ、12V-1.7W Oil Bulb, 12V-1.7W	3	3	
26-2-2	3B7-72659-0	＊ ﾒｰﾀﾊﾞﾙﾌﾞ、12V-1.7W Meter Bulb, 12V-1.7W	1	1	
26-2-3	3B7-72656-0	＊ ﾒｰﾀﾀﾞﾝﾊﾟ Meter Damper	1	1	
26-2-4	3B7-72661-0	＊ ﾌｨﾃﾝｸﾞﾌﾟﾚｰﾄ Fitting Plate	1	1	
26-2-5	930203-0500	＊ ﾅｯﾄ Nut	2	2	
26-2-6	941303-0500	＊ ｽﾌﾟﾘﾝｸﾞﾜｯｼｬ Spring Washer	2	2	
26-3	3T5-72537-0	ﾒｰﾀﾘｰﾄﾞﾜｲﾔ Meter Lead Wire	1	1	L=8000
26-4	353-76037-0	ｹｰﾌﾞﾙﾀｰﾐﾅﾙﾌﾟﾗｸﾞ Cable Terminal Plug	1	1	
26-5	3E0-72571-0	ﾄﾘﾑﾒｰﾀ Trim Meter	1	1	for “P” Type
26-5-1	3B7-72659-0	＊ ﾒｰﾀﾊﾞﾙﾌﾞ、12V-1.7W Meter Bulb, 12V-1.7W	1	1	
26-5-2	3B7-72655-0	＊ ﾒｰﾀﾀﾞﾝﾊﾟ Meter Damper	1	1	
26-5-3	3B7-72665-0	＊ ﾌｨﾃﾝｸﾞﾌﾟﾚｰﾄ Fitting Plate	1	1	
26-5-4	3B7-72666-0	＊ ｲﾝｼｭﾚｰﾃｯﾄﾞﾜｯｼｬ Insulated Washer	2	2	
26-5-5	940103-0400	＊ ﾜｯｼｬ Washer	2	2	
26-5-6	941303-0400	＊ ｽﾌﾟﾘﾝｸﾞﾜｯｼｬ Spring Washer	2	2	
26-5-7	930203-0400	＊ ﾅｯﾄ Nut	2	2	
26-6	3H6-72100-0	ﾂｰﾙ Tool	1	1	
26-7	3B7-72201-0	ﾛｰﾌﾟ、6-1600 Rope, 6-1600	1	1	
26-9	3C7-62133-2	ﾎﾞﾙﾄ、12-P1.25 Bolt, 12-P1.25	4	4	L=105
26-10	353-61334-0	ﾜｯｼｬ、13-34-3 Washer, 13-34-3	4	4	
26-11	940113-1200	ﾜｯｼｬ Washer	4	4	
26-12	3C7-62139-1	ﾅｯﾄ、12-P1.25 Nut, 12-P1.25	4	4	
26-13	3C8-84910-2	ﾄﾞﾗｯｸﾘﾝｸ E Drag Link “E”	1	1	
26-13-1	353-84916-0	＊ ﾜｯｼｬ、9.6-18-2 Washer, 9.6-18-2	2	2	
26-13-2	3C8-84914-1	＊ ｶﾗｰ、9.6-13-6.5 Collar, 9.6-13-6.5	1	1	for “P” Type
26-13-3	353-84918-0	＊ ﾅｲﾛﾝﾅｯﾄ、3/8 Nylon Nut, 3/8	2	2	
26-13-4	3C8-84917-0	＊ ﾎﾞﾙﾄ、3/8-19 Bolt, 3/8-19	1	1	
26-13-5	3C8-84916-0	＊ ｶﾗｰ、9.6-19-6 Collar, 9.6-19-6	1	1	

アクセサリー
Fig.26 ACCESSORIES

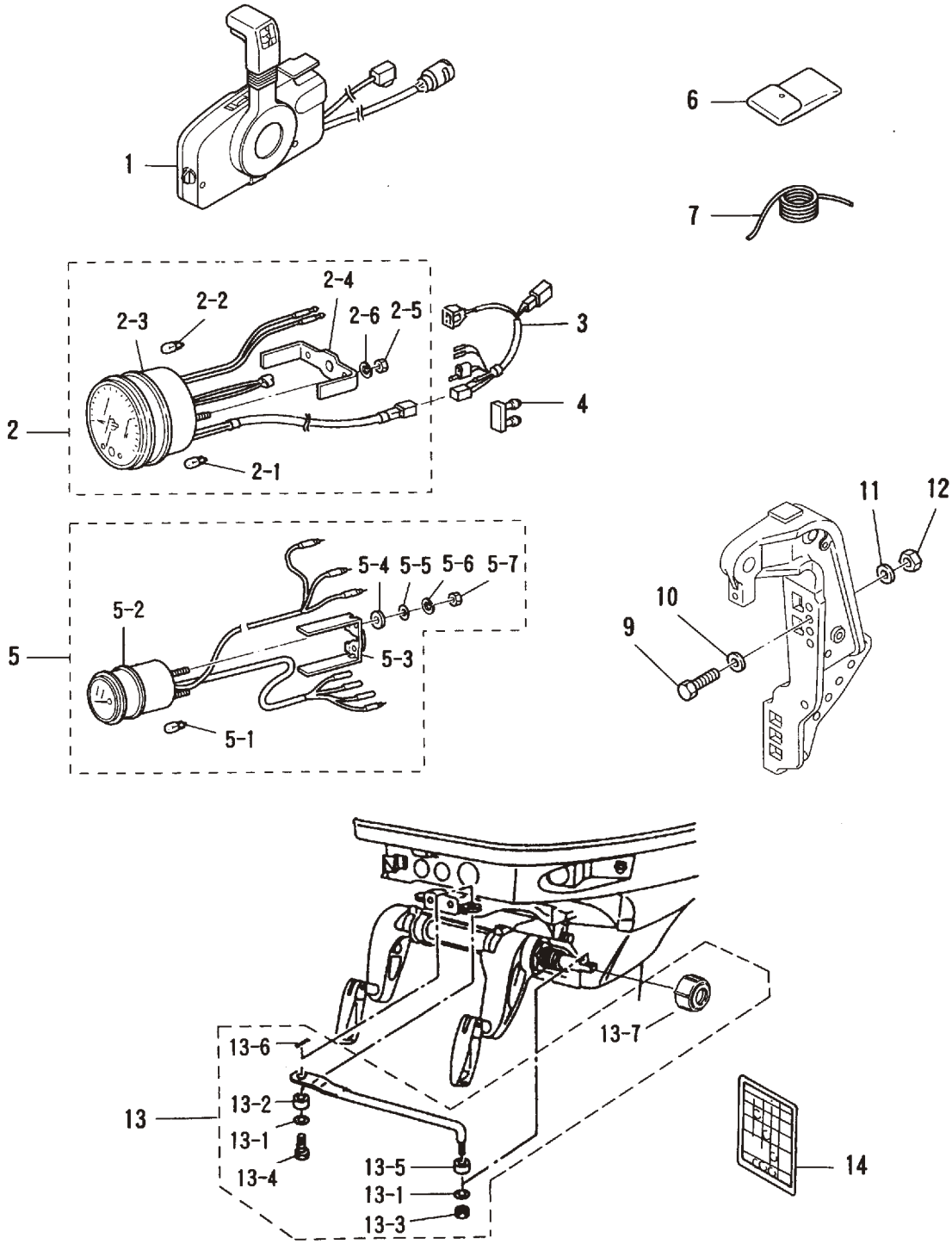

見出番号 Ref. No.	部品番号 Part No.	部　品　名 Description	個数 Q'ty D 50 B	個数 Q'ty D 40 B	備　考 Remarks
26-13-6	951503-0215	ｽﾌﾟﾘｯﾄﾋﾟﾝ、2-15 ＊ Split Pin, 2-15	1	1	for “P” Type
26-13-7	3F3-84908-0	ﾄﾞﾗｯｸﾘﾝｸｼｰﾙﾘﾝｸﾞ ＊ Drag Link Seal Ring	1	1	
26-14	3T5-72050-0	ﾜｰﾆﾝｸﾞﾌﾞｻﾞｰｺｰｼｮﾝﾃﾞｶﾙ Warning Buzzer Caution Decal	1	1	

オプショナルパーツ (1)

Fig.27 OPTIONAL PARTS (1)

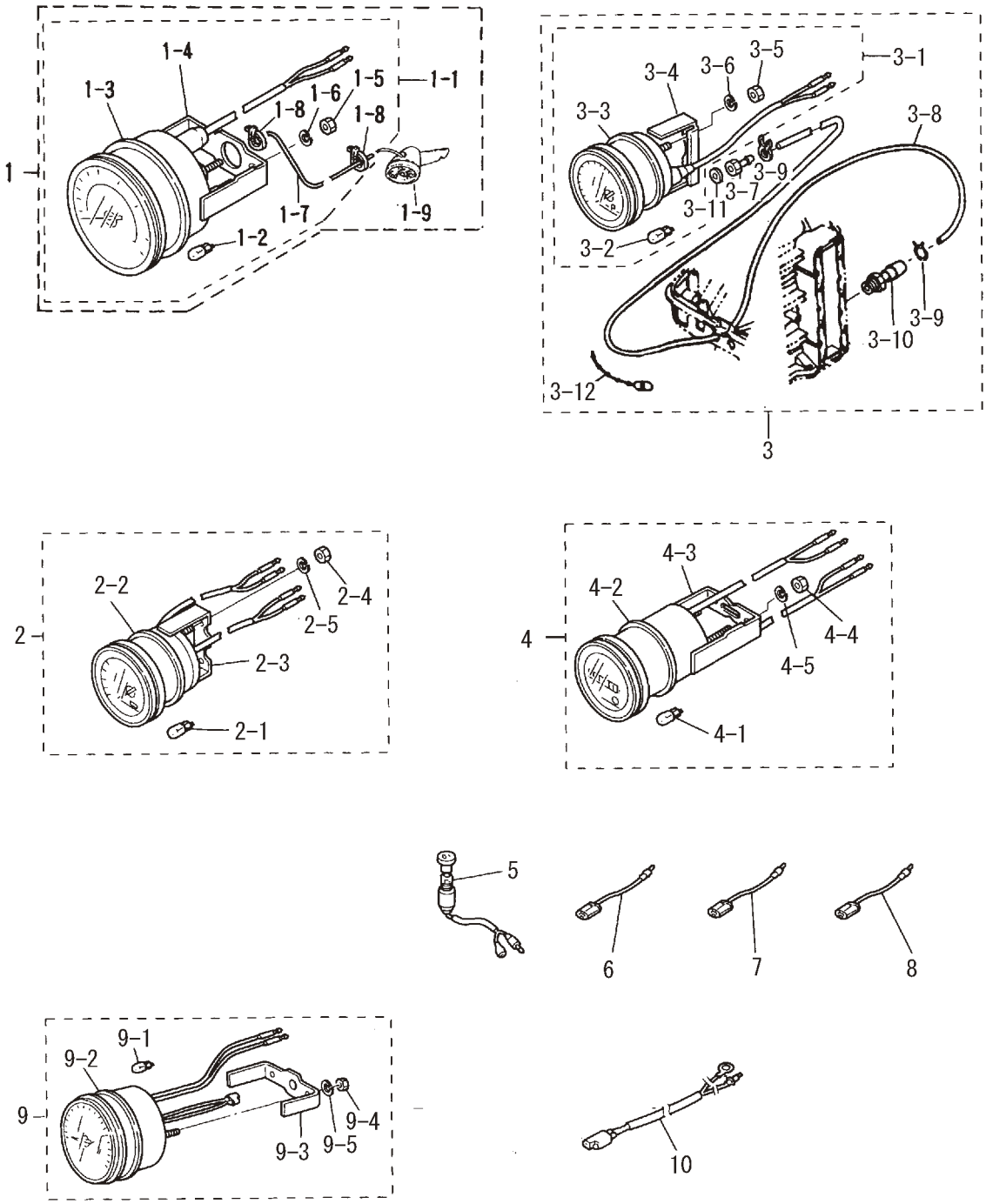

見出番号 Ref. No.	部品番号 Part No.	部　品　名 Description	個数 Q'ty D 50 B	個数 Q'ty D 40 B	備　考 Remarks
27-1	3E0-72644-0	ｽﾋﾟｰﾄﾒｰﾀ 75MPH ｷｯﾄ Speedometer 75MPH Kit	1 set	1 set	
	3E0-72522-0	ｽﾋﾟｰﾄﾞﾒｰﾀ 50MPH ｷｯﾄ Speedometer 50MPH Kit	1 set	1 set	
27-1-1	3E0-72649-0	ｽﾋﾟｰﾄﾒｰﾀ 75MPH * Speedometer 75MPH	1	1	
	3E0-72648-0	ｽﾋﾟｰﾄﾞﾒｰﾀ 50MPH * Speedometer 50MPH	1	1	
27-1-2	3B7-72659-0	ﾒｰﾀﾊﾞﾙﾌﾞ、12V-1.7W * Meter Bulb, 12V-1.7W	1	1	
27-1-3	3B7-72656-0	ﾒｰﾀﾀﾞﾝﾊﾟ * Meter Damper	1	1	
27-1-4	3B7-72661-0	ﾌｨﾃﾝｸﾞﾌﾟﾚｰﾄ * Fitting Plate	1	1	
27-1-5	930203-0500	ﾅｯﾄ * Nut	2	2	
27-1-6	941303-0500	ｽﾌﾟﾘﾝｸﾞﾜｯｼｬ * Spring Washer	2	2	
27-1-7	3B7-72650-0	ｽﾋﾟｰﾄﾞﾒｰﾀﾁｭｰﾌﾞ * Speedometer Tube	1	1	
27-1-8	3B7-72651-0	ｽﾋﾟｰﾄﾞﾒｰﾀﾊﾞﾝﾄﾞ * Speedometer Band	2	2	
27-1-9	3B7-72643-0	ｽﾋﾟｰﾄﾞﾒｰﾀｾﾝｻ * Speedometer Sensor	1	1	
27-2	3E0-72529-0	ﾎﾞﾙﾄﾒｰﾀ Voltmeter	1	1	
27-2-1	3B7-72657-0	ﾒｰﾀﾊﾞﾙﾌﾞ、12V-1.7W * Meter Bulb, 12V-1.7W	1	1	
27-2-2	3B7-72655-0	ﾒｰﾀﾀﾞﾝﾊﾟ * Meter Damper	1	1	
27-2-3	3B7-72662-0	ﾌｨﾃﾝｸﾞﾌﾟﾚｰﾄ * Fitting Plate	1	1	
27-2-4	930203-0400	ﾅｯﾄ * Nut	2	2	
27-2-5	941303-0400	ｽﾌﾟﾘﾝｸﾞﾜｯｼｬ * Spring Washer	2	2	
27-3	3E0-72527-0	ｳｫｰﾀﾌﾟﾚｯｼｬﾒｰﾀｷｯﾄ Water Pressure Meter Kit	1 set	1 set	
27-3-1	3E0-72598-0	ｳｫｰﾀﾌﾟﾚｯｼｬﾒｰﾀ * Water Pressure Meter	1	1	
27-3-2	3B7-72657-0	ﾒｰﾀﾊﾞﾙﾌﾞ、12V-1.7W * Meter Bulb, 12V-1.7W	1	1	
27-3-3	3B7-72655-0	ﾒｰﾀﾀﾞﾝﾊﾟ * Meter Damper	1	1	
27-3-4	3B7-72663-0	ﾌｨﾃﾝｸﾞﾌﾟﾚｰﾄ * Fitting Plate	1	1	
27-3-5	930203-0500	ﾅｯﾄ * Nut	2	2	
27-3-6	941303-0500	ｽﾌﾟﾘﾝｸﾞﾜｯｼｬ * Spring Washer	2	2	
27-3-7	3B7-72641-0	ｳｫｰﾀﾌﾟﾚｯｼｬﾒｰﾀﾆｯﾌﾟﾙ * Water Pressure Meter Nipple	1	1	
27-3-8	98AB-5-6000	ｳｫｰﾀﾌﾟﾚｯｼｬﾒｰﾀﾊﾟｲﾌﾟ * Water Pressure Meter Pipe	1	1	
27-3-9	338-02215-0	ｸﾘｯﾌﾟ * Clip	2	2	
27-3-10	309-01136-0	ﾆｯﾌﾟﾙ、M8-6.8 * Nipple, M8-6.8	1	1	
27-3-11	121-33159-0	ｶﾞｽｹｯﾄ、2-8-1 * Gasket, 2-8-1	1	1	

オプショナルパーツ (1)

Fig.27 OPTIONAL PARTS (1)

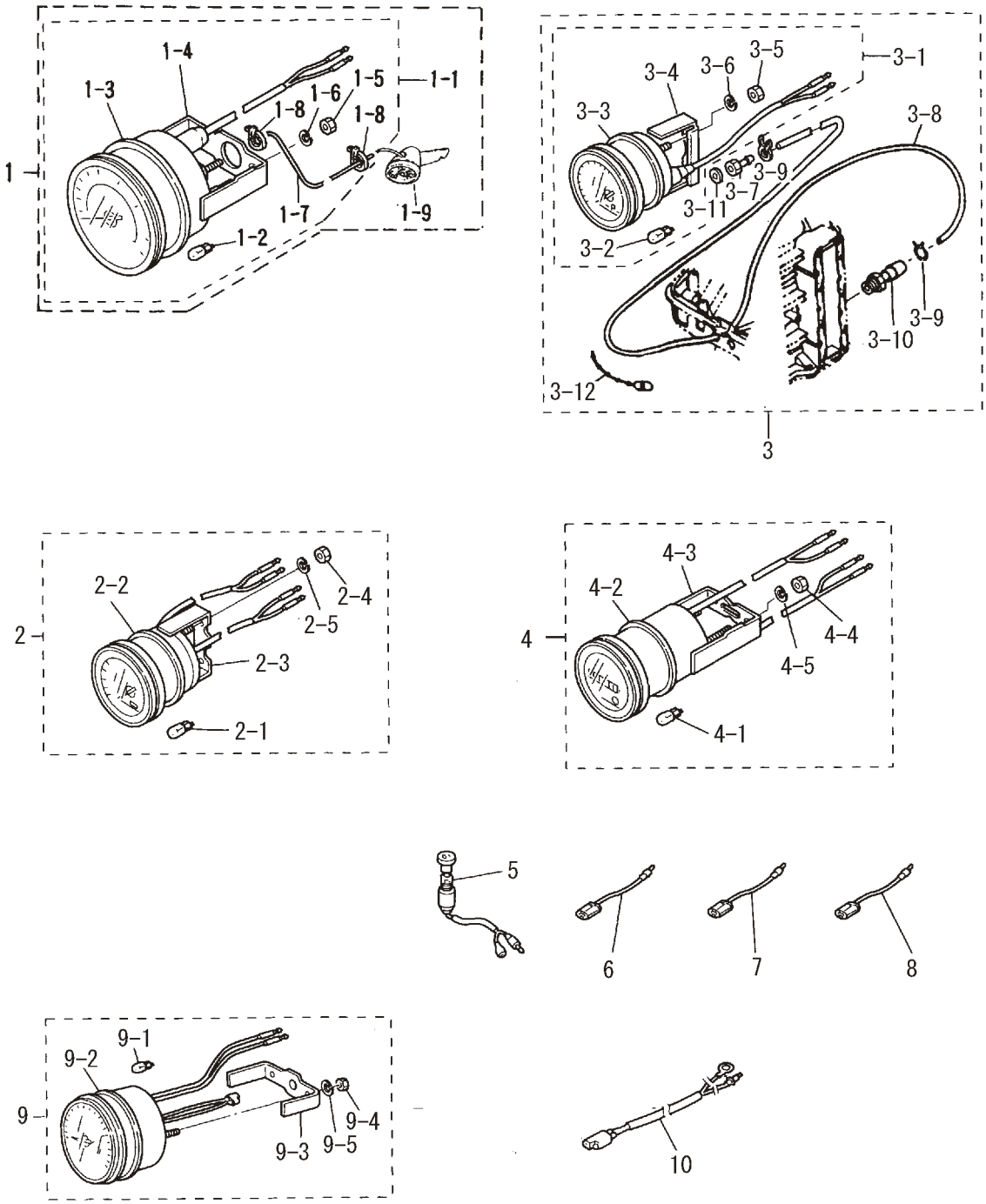

見出番号 Ref. No.	部品番号 Part No.	部　品　名 Description	個数 Q'ty D 50 B	個数 Q'ty D 40 B	備　考 Remarks
27-3-12	336-76091-0	ﾘｰﾄﾞﾜｲﾔﾊﾞﾝﾄﾞ ＊ Lead Wire Band	3	3	
27-4	3E0-72524-0	ｱﾜﾒｰﾀ Hour-meter	1	1	
27-4-1	3B7-72657-0	ﾒｰﾀﾊﾞﾙﾌﾞ、12V-1.7W ＊ Meter Bulb, 12V-1.7W	1	1	
27-4-2	3B7-72655-0	ﾒｰﾀﾀﾞﾝﾊﾟ ＊ Meter Damper	1	1	
27-4-3	3B7-72664-0	ﾌｨﾃﾝｸﾞﾌﾟﾚｰﾄ ＊ Fitting Plate	1	1	
27-4-4	930203-0400	ﾅｯﾄ ＊ Nut	2	2	
27-4-5	941303-0400	ｽﾌﾟﾘﾝｸﾞﾜｯｼｬ ＊ Spring Washer	2	2	
27-5	353-72521-1	ﾒｰﾀﾗﾝﾌﾟｽｲｯﾁ Meter Lamp Switch	1	1	
27-6	353-72546-0	ｱｼｽﾄｺｰﾄﾞ（ﾚｯﾄﾞ） Assist Cord (Red)	AR	AR	for “P” Type
27-7	353-72547-0	ｱｼｽﾄｺｰﾄﾞ（ﾌﾞﾙｰ） Assist Cord (Blue)	AR	AR	
27-8	353-72548-0	ｱｼｽﾄｺｰﾄﾞ（ﾌﾞﾗｯｸ） Assist Cord (Black)	AR	AR	
27-9	3B7-72530-2	ﾀｺﾒｰﾀ（ｵｲﾙﾗﾝﾌﾟ無） Tachometer (with out oil lamp)	1	1	
27-9-1	3B7-72659-0	ﾒｰﾀﾊﾞﾙﾌﾞ、12V-1.7W ＊ Meter Bulb, 12V-1.7W	1	1	
27-9-2	3B7-72656-0	ﾒｰﾀﾀﾞﾝﾊﾟ ＊ Meter Damper	1	1	
27-9-3	3B7-72661-0	ﾌｨﾃﾝｸﾞﾌﾟﾚｰﾄ ＊ Fitting Plate	1	1	for “F” Type
27-9-4	930203-0500	ﾅｯﾄ ＊ Nut	2	2	
27-9-5	941303-0500	ｽﾌﾟﾘﾝｸﾞﾜｯｼｬ Spring Washer	2	2	
27-10	3T5-72539-0	ﾒｰﾀﾘｰﾄﾞﾜｲﾔ Tachometer Lead Wire	1	1	L=2000

オプショナルパーツ (2) (P タイプ)
Fig.28 OPTIONAL PARTS (2) (P Type)

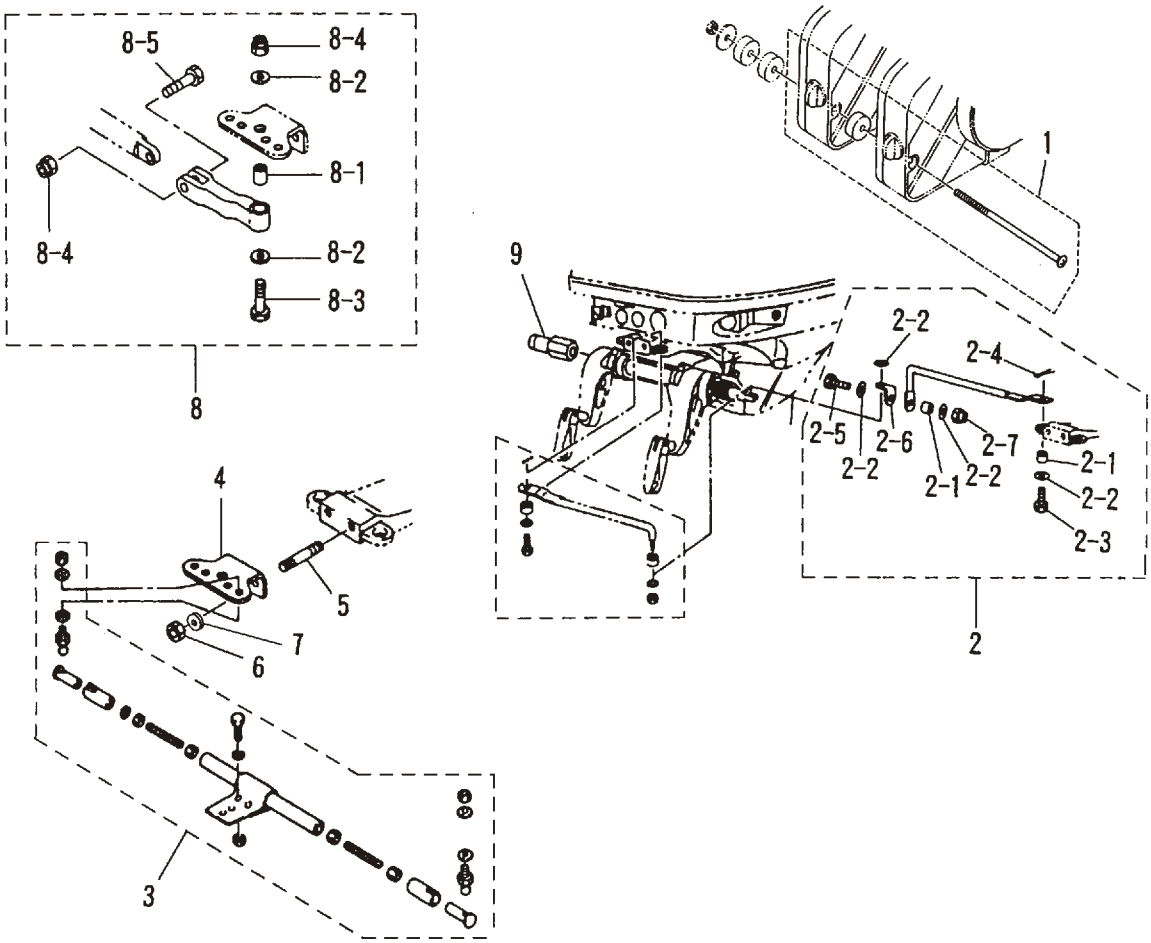

見出番号 Ref. No.	部品番号 Part No.	部　品　名 Description	個数 Q'ty D 50 B	個数 Q'ty D 40 B	備　考 Remarks
28-1	3A3-81301-0	ﾂｲﾝﾘﾓｰﾄｺﾝﾄﾛｰﾙﾎﾞｯｸｽｷｯﾄ Twin Remote Control Box Kit	1	1	
28-2	3C8-84900-1	ﾀｲﾊﾞｰｷｯﾄ D Tie-Bar Kit “D”	1	1	
28-2-1	3C8-84914-1	ｶﾗｰ、9.6-13-6.5 ＊ Collar, 9.6-13-6.5	2	2	
28-2-2	353-84916-0	ﾜｯｼｬ、9.6-18-2 ＊ Washer, 9.6-18-2	4	4	
28-2-3	3C8-84917-0	ﾎﾞﾙﾄ、3/8-19 ＊ Bolt, 3/8-19	1	1	
28-2-4	951503-0215	ｽﾌﾟﾘｯﾄﾋﾟﾝ、2-15 ＊ Split Pin, 2-15	1	1	
28-2-5	3C8-84937-0	ﾎﾞﾙﾄ、3/8-30 ＊ Bolt, 3/8-30	1	1	
28-2-6	3C8-84936-0	ｽﾃｱﾘﾝｸﾞﾛｯﾄﾞｼﾞｮｲﾝﾄ ＊ Steering Rod Joint	1	1	
28-2-7	353-84918-0	ﾅｲﾛﾝﾅｯﾄ、3/8 ＊ Nylon Nut, 3/8	1	1	
28-3	3A3-84900-1	ﾀｲﾊﾞｰｷｯﾄ C Tie-Bar Kit “C”	1	1	
28-4	3C8-84830-0	ｽﾃｱﾘﾝｸﾞﾌｯｸﾌﾟﾚｰﾄ Steering Hook Plate	1	1	
28-5	915203-0816	ｽﾀｯﾄﾞﾎﾞﾙﾄ Stud Bolt	2	2	
28-6	930403-0800	ﾅｲﾛﾝﾅｯﾄ、8-P1.25 Nylon Nut, 8-P1.25	2	2	
28-7	940113-0800	ﾜｯｼｬ Washer	2	2	
28-8	3C8Q84960-0	ｸﾚﾋﾞｽｱｯｼ Crevice Ass'y	1	1	
28-8-1	3C8-84962-0	ｶﾗｰ、9.6-13-20.5 ＊ Collar, 9.6-13-20.5	1	1	
28-8-2	353-84916-0	ﾜｯｼｬ、9.6-18-2 ＊ Washer, 9.6-18-2	2	2	
28-8-3	3C8-84963-0	ﾎﾞﾙﾄ、3/8-43 ＊ Bolt, 3/8-43	1	1	
28-8-4	353-84918-0	ﾅｲﾛﾝﾅｯﾄ、3/8 ＊ Nylon Nut, 3/8	2	2	
28-8-5	3C8-84964-0	ﾎﾞﾙﾄ、3/8-35 ＊ Bolt, 3/8-35	1	1	
28-9	353-84904-0	ﾄﾞﾗｯｸﾘﾝｸｽﾍﾟｰｻ Drag Link Spacer	1	1	

オプショナルパーツ (3) (P タイプ)
Fig.29 OPTIONAL PARTS (3) (P Type)

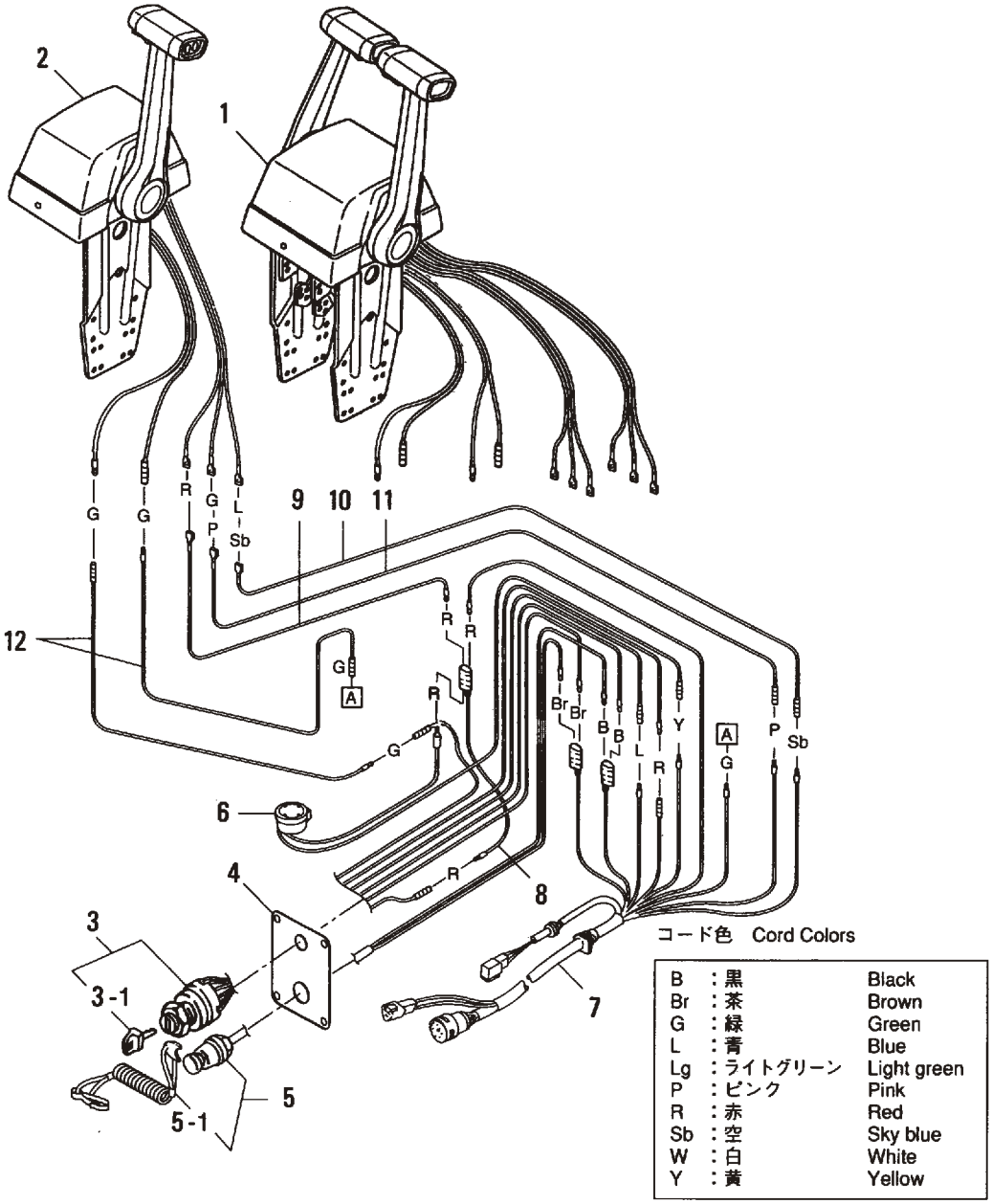

見出番号 Ref. No.	部品番号 Part No.	部　品　名 Description	個数 Q'ty D 50 B	個数 Q'ty D 40 B	備　考 Remarks
29-1	3T5Q84520-1	ｺﾝﾄﾛｰﾙﾎﾞｯｸｽ （ RC6GT ） Control Box （ RC6GT ）	1	1	for Twin　N.A.F.N
29-2	3T5Q84480-1	ｺﾝﾄﾛｰﾙﾎﾞｯｸｽ （ RC6G ） Control Box （ RC6G ）	1	1	for Single　N.A.F.N
29-3	353-76020-3	ﾒｲﾝｽｲｯﾁ Main Switch	(2)1	(2)1	UNIQUE
29-3-1	3F3-76217-0	ﾒｲﾝｽｲｯﾁｷｰ (No.301) ＊ Main Switch Key (No.301)	(2)1	(2)1	UNIQUE
	3F3-76218-0	ﾒｲﾝｽｲｯﾁｷｰ (No.302) ＊ Main Switch Key (No.302)	(2)1	(2)1	UNIQUE
	3F3-76219-0	ﾒｲﾝｽｲｯﾁｷｰ (No.303) ＊ Main Switch Key (No.303)	(2)1	(2)1	UNIQUE
29-4	3T5-76201-0	ﾒｲﾝｽｲｯﾁﾊﾟﾈﾙ Main Switch Panel	(2)1	(2)1	
29-5	3A3-06830-0	ｽﾄｯﾌﾟｽｲｯﾁ Lanyard Stop Switch	(2)1	(2)1	
29-5-1	353-06821-0	ｽﾄｯﾌﾟｽｲｯﾁﾛｯｸ (ﾛｰﾌﾟ付) ＊ Stop Switch Lanyard	(2)1	(2)1	
29-6	3C8-76171-0	ｵｰﾊﾞｰﾋｰﾄﾌﾞｻﾞｰ Over-Heat Buzzer	(2)1	(2)1	
29-7	3T5-76115-0	ｺｰﾄﾞｱｯｼ B Cord Ass'y B	(2)1	(2)1	L=6200
29-8	353-72546-0	ｱｼｽﾄｺｰﾄﾞ (ﾚｯﾄﾞ) Assist Cord (Red)	(2)1	(2)1	
29-9	3C7-84475-0	PTT ｽｲｯﾁｺｰﾄﾞ (ﾚｯﾄﾞ) PTT Switch Cord (Red)	(2)1	(2)1	( ) is Using Number for Twin Engines.
29-10	3C7-84476-0	PTT ｽｲｯﾁｺｰﾄﾞ (ｽｶｲﾌﾞﾙｰ) PTT Switch Cord (Sky Blue)	(2)1	(2)1	
29-11	3C7-84477-0	PTT ｽｲｯﾁｺｰﾄﾞ (ﾋﾟﾝｸ) PTT Switch Cord (Pink)	(2)1	(2)1	
29-12	3C7-84471-1	ﾆｭﾄﾗﾙ ｽｲｯﾁｺｰﾄﾞ (ｸﾞﾘｰﾝ) Neutral Switch Cord (Green)	(4)2	(4)2	

オプショナルパーツ (4)

Fig.30 OPTIONAL PARTS (4)

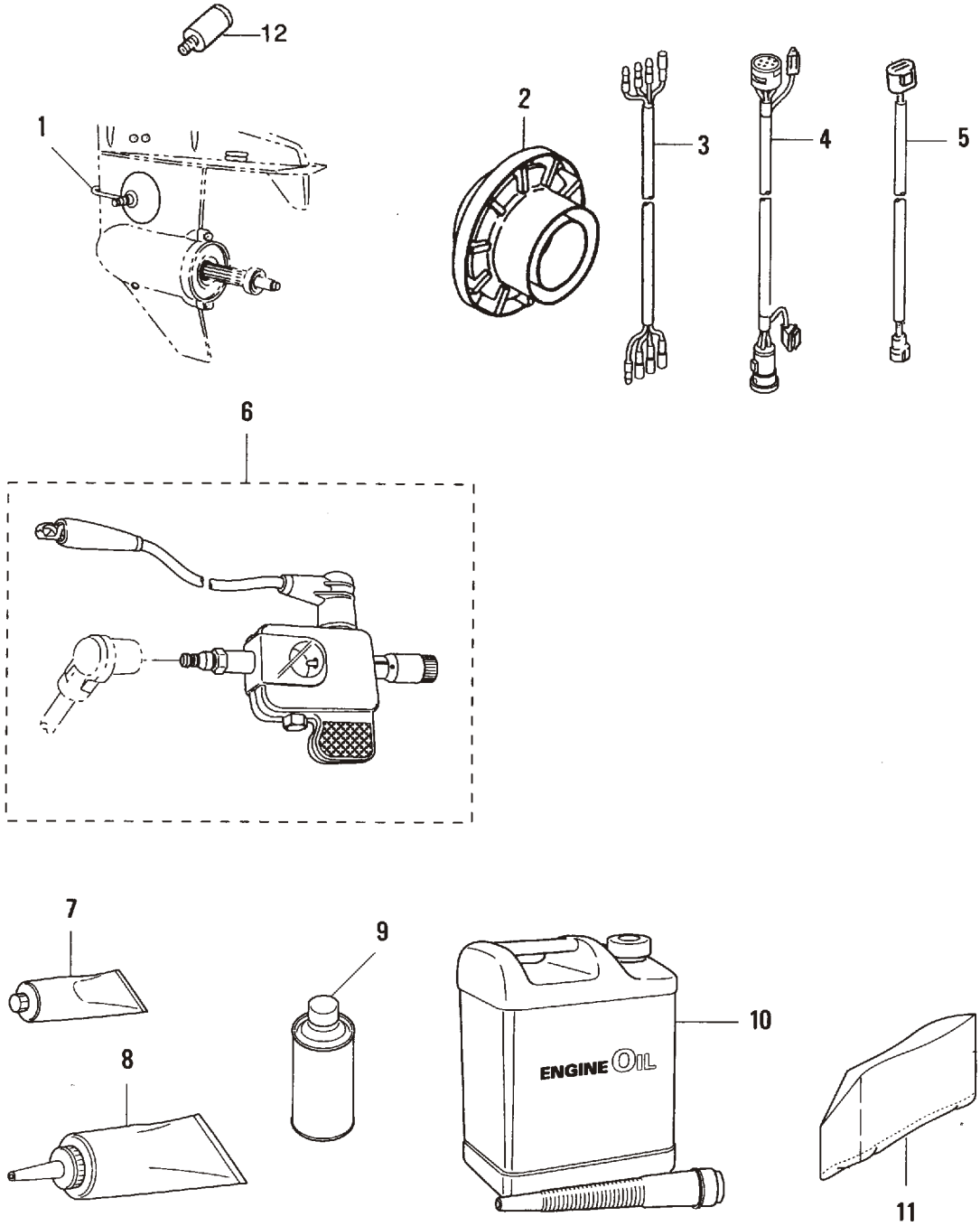

見出番号 Ref. No.	部品番号 Part No.	部　品　名 Description	個数 Q'ty D 50 B	個数 Q'ty D 40 B	備　考 Remarks
30-1	353-72406-0	ﾄﾞﾗｲﾌﾞｸﾘｰﾅ Drive Cleaner	1	1	
30-2	3C8-64110-0	ﾃｽﾄﾌﾟﾛﾍﾟﾗ Test Propeller	1	1	
30-3	3A3-72573-0	ｴｸｽﾃﾝｼｮﾝｺｰﾄﾞ（ﾄﾘﾑﾒｰﾀ） Extension Cord (Trim Meter)	1	1	L=2000
30-4	3T5-76114-0	11P ｴｸｽﾃﾝｼｮﾝｺｰﾄﾞ 11P Extension Cord	1	1	L=2000
30-5	3T5-76112-0	2P ｴｸｽﾃﾝｼｮﾝｺｰﾄﾞ 2P Extension Cord	1	1	L=2000
30-6	3F3-72540-0	ｽﾊﾟｰｸﾃｽﾀ Spark Tester	1	1	
30-7	332-72309-0	ｸﾞﾘｽ（ 250g ） Grease (250g)	1	1	24 tubes/case N.A.F.N
30-8	332-72306-0	ｷﾞﾔｵｲﾙ（ 500ml ） Gear Oil (500ml)	1	1	30 tubes/case N.A.F.N
30-9	3AC-72326-0	ﾀｯﾁｱｯﾌﾟﾍﾟｲﾝﾄ（ｱｸｱﾏﾘﾝﾌﾞﾙｰ） Touch-up Paint (Aquamarine Blue)	1	1	N.A.F.N
30-10	3Y9-72304-0	MD ﾌﾟﾗﾁﾅ（ 4.0 L ） MD Platinum (4.0 liter)	1	1	Engine Oil N.A.F.N
30-11	345-72313-0	ﾋﾞﾆｰﾙﾓｰﾀｶﾊﾞｰ（ LL ） Vinyl Motor Cover (LL)	1	1	UNIQUE
30-12	3B7-60007-0	ﾌﾗｯｼﾝｸﾞｱﾀｯﾁﾒﾝﾄ Flushing Attachment	1	1	

アッセンブリ・キット

Fig.31 ASSEMBLY・KIT

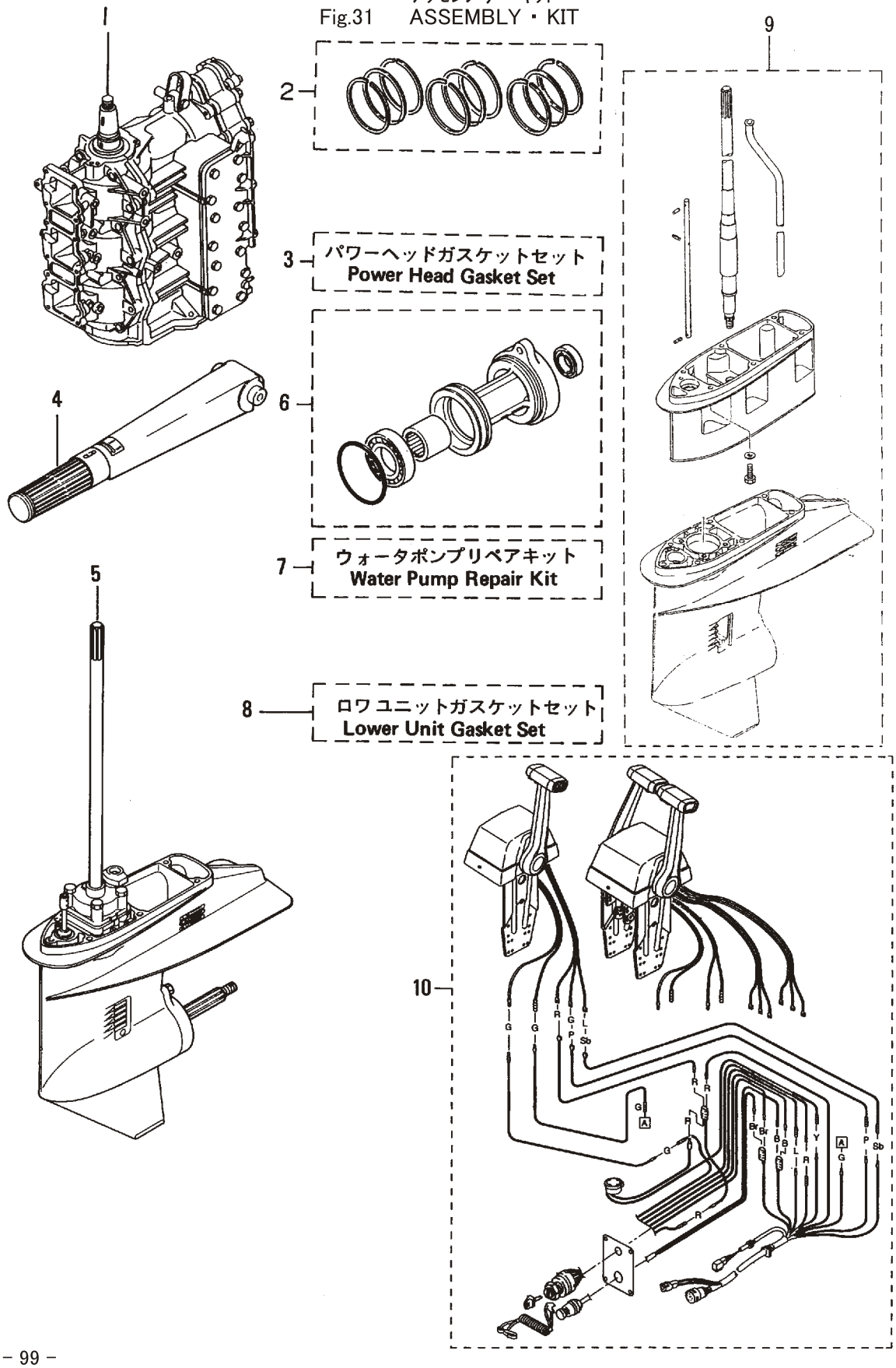

見出番号 Ref. No.	部品番号 Part No.	部　品　名 Description	個数 Q'ty D 50 B	D 40 B	備　考 Remarks
31-1	3Z5B87110-2	ｴﾝｼﾞﾝｼｮｰﾄﾌﾞﾛｯｸ Engine Short Block	1	1	# 011601XC～
31-2	3T5-87123-0	ﾋﾟｽﾄﾝﾘﾝｸﾞｾｯﾄ (STD) Piston Ring Set (STD)	1 set	1 set	
	3T5-00011-0	ﾋﾟｽﾄﾝﾘﾝｸﾞ 1st (STD) * Piston Ring 1st (STD)	3	3	
	3T5-00012-0	ﾋﾟｽﾄﾝﾘﾝｸﾞ 2nd (STD) * Piston Ring 2nd (STD)	6	6	
31-2	3T5-87124-0	ﾋﾟｽﾄﾝﾘﾝｸﾞｾｯﾄ (0.5mm O/S) Piston Ring Set (0.5mm O/S)	1 set	1 set	
	3T5-00014-0	ﾋﾟｽﾄﾝﾘﾝｸﾞ 1st (0.5mm O/S) * Piston Ring 1st (0.5mm O/S)	3	3	
	3T5-00015-0	ﾋﾟｽﾄﾝﾘﾝｸﾞ 2nd (0.5mm O/S) * Piston Ring 2nd (0.5mm O/S)	6	6	
31-3	3T5-87121-3	ﾊﾟﾜｰﾍｯﾄﾞｶﾞｽｹｯﾄｾｯﾄ Power Head Gasket Set	1 set	1 set	
	3T5-01005-0	ｼﾘﾝﾀﾞﾍｯﾄﾞｶﾞｽｹｯﾄ * Cylinder Head Gasket	1	1	
	3T5-01024-0	ｼﾘﾝﾀﾞﾍｯﾄﾞｶﾊﾞｰｶﾞｽｹｯﾄ * Cylinder Head Cover Gasket	1	1	
	3T5-01032-0	ｻｰﾓｽﾀｯﾄｷｬｯﾌﾟｶﾞｽｹｯﾄ * Thermostat Cap Gasket	1	1	
	3T5-02104-1	ﾘｰﾄﾞﾊﾞﾙﾌﾞｶﾞｽｹｯﾄ * Reed Valve Gasket	1	1	
	3T5-02245-0	ｴｱﾁｬﾝﾊﾞｶﾊﾞｰｶﾞｽｹｯﾄ * Air Chamber Cover Gasket	1	1	
	3C8-02305-1	ｴｷｿﾞｰｽﾄｶﾊﾞｰｶﾞｽｹｯﾄ * Exhaust Cover Gasket	2	2	
	353-00108-0	O ﾘﾝｸﾞ、2.4-44.7 * O-Ring, 2.4-447.7	1	1	Crankshaft (Upper)
	3C8-01215-0	ｵｲﾙｼｰﾙ、16-28-7 * Oil Seal, 16-28-7	1	1	Drive Shaft
	3T5-00122-0	ｵｲﾙｼｰﾙ、25-40-8 * Oil Seal, 25-40-8	1	1	Crankshaft (Lower)
	346-01216-0	O ﾘﾝｸﾞ、1.7-59 * O-Ring, 1.7-59	1	1	Crank Case Head
	3B7-02235-0	O ﾘﾝｸﾞ A * O-Ring A	2	2	Fuel Filter Oil Filter
	3B7-02236-0	O ﾘﾝｸﾞ B * O-Ring B	2	2	Fuel Filter Oil Filter
	3C8-01303-1	ｴﾝｼﾞﾝﾍﾞｰｽｶﾞｽｹｯﾄ * Engine Basement Gasket	1	1	
31-4	3T5Q63003-0	ﾃｨﾗﾊﾝﾄﾞﾙｱｯｼ Tiller Handle Ass'y	1	1	
31-5	3T5Q87301-2	ﾛﾜﾕﾆｯﾄｱｯｼ S Lower Unit Ass'y "S"	1	1	for Transom "S"
	3T5Q87302-2	ﾛﾜﾕﾆｯﾄｱｯｼ L Lower Unit Ass'y "L"	1	1	for Transom "L"
	3T5Q87304-2	ﾛﾜﾕﾆｯﾄｱｯｼ UL Lower Unit Ass'y "UL"	1	1	for Transom "UL"

見出番号 Ref. No.	部品番号 Part No.	部　品　名 Description	個数 Q'ty D 50 B	個数 Q'ty D 40 B	備　考 Remarks
31-6	3C8Q60100-0	ﾌﾟﾛﾍﾟﾗｼｬﾌﾄﾊｳｼﾞﾝｸﾞｱｯｼ Propeller Shaft Housing Ass'y	1	1	
31-7	3T5-87322-1	ｳｫｰﾀﾎﾟﾝﾌﾟﾘﾍﾟｱｷｯﾄ Water Pump Repair Kit	1 set	1 set	
	3C8-65021-2	ｳｫｰﾀﾎﾟﾝﾌﾟｲﾝﾍﾟﾗ ＊ Water Pump Impeller	1	1	
	332-65022-0	ｳｫｰﾀﾎﾟﾝﾌﾟｲﾝﾍﾟﾗｷｰ ＊ Water Pump Impeller Key	1	1	
	3T5-65011-0	ﾎﾟﾝﾌﾟｹｰｽﾗｲﾅ ＊ Pump Case Liner	1	1	
	3T5-65018-1	ﾎﾟﾝﾌﾟｹｰｽｶﾞｽｹｯﾄ ＊ Pump Case Gasket	1	1	
	3C8-65025-0	ｳｫｰﾀﾎﾟﾝﾌﾟｶﾞｲﾄﾞﾌﾟﾚｰﾄ ＊ Water Pump Guide Plate	1	1	
	3C8-65029-1	ｶﾞｲﾄﾞﾌﾟﾚｰﾄｶﾞｽｹｯﾄ ＊ Guide Plate Gasket	1	1	
31-8	3T5-87321-1	ﾛﾜﾕﾆｯﾄｶﾞｽｹｯﾄｾｯﾄ Lower Unit Gasket Set	1 set	1 set	
	3C8-61012-1	ﾄﾞﾗｲﾌﾞｼｬﾌﾄﾊｳｼﾞﾝｸﾞｶﾞｽｹｯﾄ ＊ Drive Shaft Housing Gasket	1	1	
	3C8-02312-1	ｴｷｿﾞｰｽﾄﾊﾟｲﾌﾟｶﾞｽｹｯﾄ ＊ Exhaust Pipe Gasket	1	1	
	3C8-61181-1	ｴｷｿﾞｰｽﾄﾊｳｼﾞﾝｸﾞｶﾞｽｹｯﾄ ＊ Exhaust Housing Gasket	1	1	
	332-60006-0	ｶﾞｽｹｯﾄ、8.1-15-1 ＊ Gasket, 8.1-15-1	2	2	
	3B7-60016-1	ｶﾞｽｹｯﾄ、10.1-15-1 ＊ Gasket, 10.1-15-1	1	1	
	3T5-65018-1	ﾎﾟﾝﾌﾟｹｰｽｶﾞｽｹｯﾄ ＊ Pump Case Gasket	1	1	
	3C8-65029-1	ｶﾞｲﾄﾞﾌﾟﾚｰﾄｶﾞｽｹｯﾄ ＊ Guide Plate Gasket	1	1	
	3C8-60223-0	ｵｲﾙｼｰﾙ、17-33-6 ＊ Oil Seal, 17-33-6	2	2	Drive Shaft
	334-60223-0	ｵｲﾙｼｰﾙ、22-36-10 ＊ Oil Seal, 22-36-10	1	1	Propeller Shaft
	345-65015-0	O ﾘﾝｸﾞ、3.2-47 ＊ O-Ring, 3.2-47	1	1	Pump Case (Lower)
	332-66021-0	O ﾘﾝｸﾞ、2.4-5.8 ＊ O-Ring, 2.4-5.8	1	1	Cam Rod
	3C8-66032-0	O ﾘﾝｸﾞ、3.5-21.7 ＊ O-Ring, 3.5-21.7	1	1	Cam Rod Bushing
	345-60103-0	O ﾘﾝｸﾞ、3.53-69.44 ＊ O-Ring, 3.53-69.44	1	1	Propeller Shaft
31-9	3C8Q87314-0	ｴｸｽﾃﾝｼｮﾝﾊｳｼﾞﾝｸﾞｷｯﾄ UL Extension Housing Kit "UL"	1 set	1 set	
	3C8Q61110-0	ｴｸｽﾃﾝｼｮﾝﾊｳｼﾞﾝｸﾞ UL ＊ Extension Housing "UL"	1	1	
	910113-5835	ﾎﾞﾙﾄ ＊ Bolt	6	6	
	346-66037-0	ｶﾑﾛｯﾄﾞﾎﾙﾀﾞ ＊ Cam Rod Holder	1	1	
	353-66024-0	ｽﾄｯﾊﾟ ＊ Stopper	1	1	

見出番号 Ref. No.	部品番号 Part No.	部　品　名 Description	個数 Q'ty D 50 B	個数 Q'ty D 40 B	備　考 Remarks
31-9	910103-6612	ﾎﾞﾙﾄ ＊ Bolt	1	1	
	346-65204-0	ｳｫｰﾀﾊﾟｲﾌﾟｵｰｸｼﾞｭｱﾘｰﾏｳﾝﾄ ＊ Water Pipe Auxiliary Mount	1	1	
	3C8Q60090-0	ｷﾞﾔｹｰｽ（ｻﾌﾞｳｫｰﾀﾊﾟｲﾌﾟ付） ＊ Gear Case (with Sub Water Pie)	1	1	
	3C8-64303-0	ﾄﾞﾗｲﾌﾞｼｬﾌﾄ UL ＊ Drive Shaft "UL"	1	1	
	3C8-66014-0	ｶﾑﾛｯﾄﾞ UL ＊ Cam Rod "UL"	1	1	
	3C8-65120-0	ｳｫｰﾀﾊﾟｲﾌﾟ UL ＊ Water Pipe "UL"	1	1	
	951407-0312	ｽﾌﾟﾘﾝｸﾞﾋﾟﾝ、3-12 ＊ Spring Pin, 3-12	2	2	Clutch Cam & Bushing
	3C8-65120-0	ｳｫｰﾀﾊﾟｲﾌﾟ UL ＊ Water Pipe "UL"	1	1	
	951403-0312	ｽﾌﾟﾘﾝｸﾞﾋﾟﾝ、3-12 ＊ Spring Pin, 3-12	2	2	Shift Rod Joint
31-10	3T5Q84490-1	ﾄｯﾌﾟﾏｳﾝﾄﾘﾓｺﾝｷｯﾄ Top Mount Control Kit	1 set	1 set	for Single N.A.F.N
	3T5Q84540-1	ﾄｯﾌﾟﾏｳﾝﾄﾘﾓｺﾝｷｯﾄ、ﾂｲﾝ Top Mount Control Kit Twin	1 set	1 set	for Twin N.A.F.N

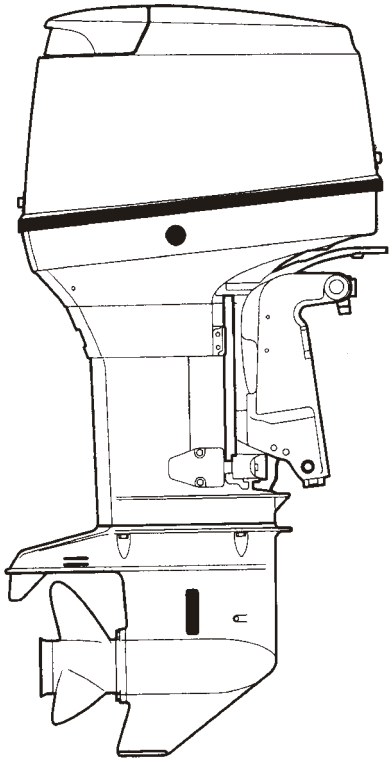

TLDI

WD50B

ｷﾞﾔｹｰｽ（ﾄﾞﾗｲﾌﾞｼｬﾌﾄ）
Fig.1 GEAR CASE (DRIVE SHAFT)

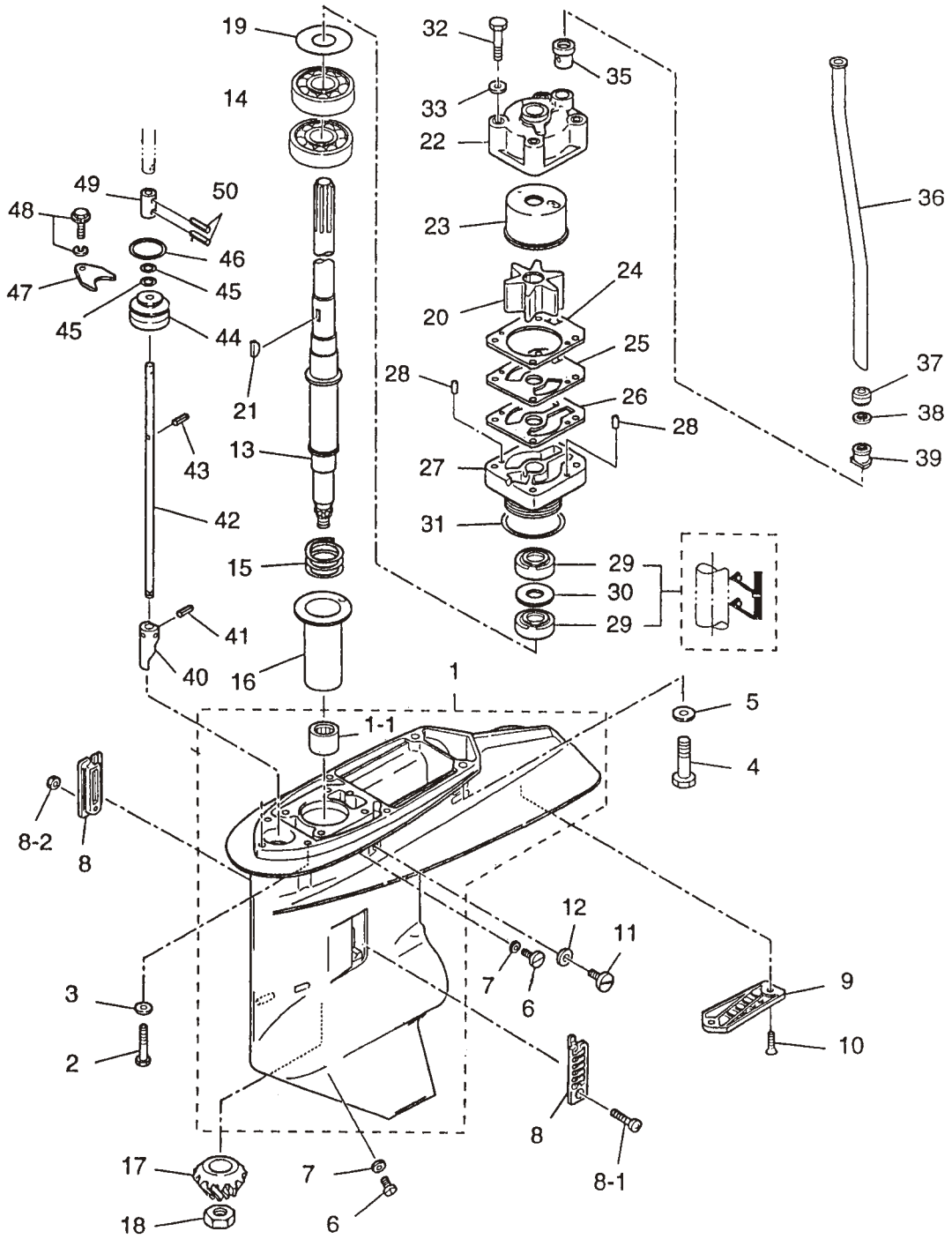

見出番号 Ref. No.	部品番号 Part No.	部　品　名 Description	個数 Q'ty WD 50 B		備　考 Remarks
1-1	3S7Q60090-1	ｷﾞﾔｹｰｽ Gear Case	1		with Sub Water Pipe
1-1-1	353-60211-0	ﾆｰﾄﾞﾙﾍﾞｱﾘﾝｸﾞ、25-33-30 ＊ Needle Bearing, 25-33-30	1		
1-2	916189-0835	ﾎﾞﾙﾄ、8-35 Bolt, 8-35	4		
1-3	940213-0800	ﾜｯｼｬ Washer	4		
1-4	3B7-60001-2	ﾎﾞﾙﾄ、10-40 Bolt, 10-40	2		
1-5	940213-1000	ﾜｯｼｬ Washer	2		
1-6	332-60005-2	ｵｲﾙﾌﾟﾗｸﾞ Oil Plug	2		
1-7	332-60006-0	ｶﾞｽｹｯﾄ、8.1-15-1 Gasket, 8.1-15-1	2		
1-8	3B7-60235-0	ｳｫｰﾀｽﾄﾚｰﾅｾｯﾄ Water Strainer Set	1		
1-8-1	921503-0438	ｽｸﾘｭ ＊ Screw	1		
1-8-2	930403-0400	ﾅｲﾛﾝﾅｯﾄ、4P 0.7 ＊ Nylon Nut, 4P 0.7	1		
1-9	3F3-60204-0	ｻﾌﾞｳｫｰﾀｽﾄﾚｰﾅ Sub Water Strainer	1		
1-10	921503-0608	ｽｸﾘｭ Screw	2		
1-11	3B7-60015-1	ｳｫｰﾀﾌﾟﾗｸﾞ Water Plug	1		
1-12	3B7-60016-1	ｶﾞｽｹｯﾄ、10.1-15-1 Gasket, 10.1-15-1	1		
1-13	3S7-64302-0	ﾄﾞﾗｲﾌﾞｼｬﾌﾄ L Drive Shaft “L”	1		
	3S7-64303-0	ﾄﾞﾗｲﾌﾞｼｬﾌﾄ UL Drive Shaft “UL”	1		
1-14	3S7-60213-0	ﾍﾞｱﾘﾝｸﾞ、6205R Bearing, 6205R	2		
1-15	353-64237-0	ﾄﾞﾗｲﾌﾞｼｬﾌﾄｽﾌﾟﾘﾝｸﾞ Drive Shaft Spring	1		
1-16	3A3-64328-0	ﾄﾞﾗｲﾌﾞｼｬﾌﾄｽﾌﾟﾘﾝｸﾞｶﾞｲﾄﾞ Drive Shaft Spring Guide	1		
1-17	3F3-64020-0	ﾍﾞﾍﾞﾙｷﾞﾔ B Bevel Gear “B”	1		
1-18	353-64027-0	ﾅｯﾄ、ﾍﾞﾍﾞﾙｷﾞﾔ B Nut, Bevel Gear “B”	1		
1-19	353-64081-0	ｼﾑ、44-50.5-0.1 Shim, 44-50.5-0.1	AR		
	353-64082-0	ｼﾑ、44-50.5-0.15 Shim, 44-50.5-0.15	AR		
	353-64083-0	ｼﾑ、44-50.5-0.3 Shim, 44-50.5-0.3	AR		
1-20	3B7-65021-2	ｳｫｰﾀﾎﾟﾝﾌﾟｲﾝﾍﾟﾗ Water Pump Impeller	1		
1-21	3B7-65022-0	ｳｫｰﾀﾎﾟﾝﾌﾟｲﾝﾍﾟﾗｷｰ Water Pump Impeller Key	1		
1-22	3B7-65016-0	ﾎﾟﾝﾌﾟｹｰｽ (ｱｯﾊﾟ) Pump Case (Upper)	1		
1-23	3B7-65238-0	ﾎﾟﾝﾌﾟｹｰｽﾗｲﾅ (ｸﾛｰﾑﾒｯｷ) Pump Case Liner (Chrome Plated)	1		
1-24	3B7-65018-0	ﾎﾟﾝﾌﾟｹｰｽｶﾞｽｹｯﾄ Pump Case Gasket	1		

ｷﾞﾔｹｰｽ（ﾄﾞﾗｲﾌﾞｼｬﾌﾄ）
Fig.1 GEAR CASE (DRIVE SHAFT)

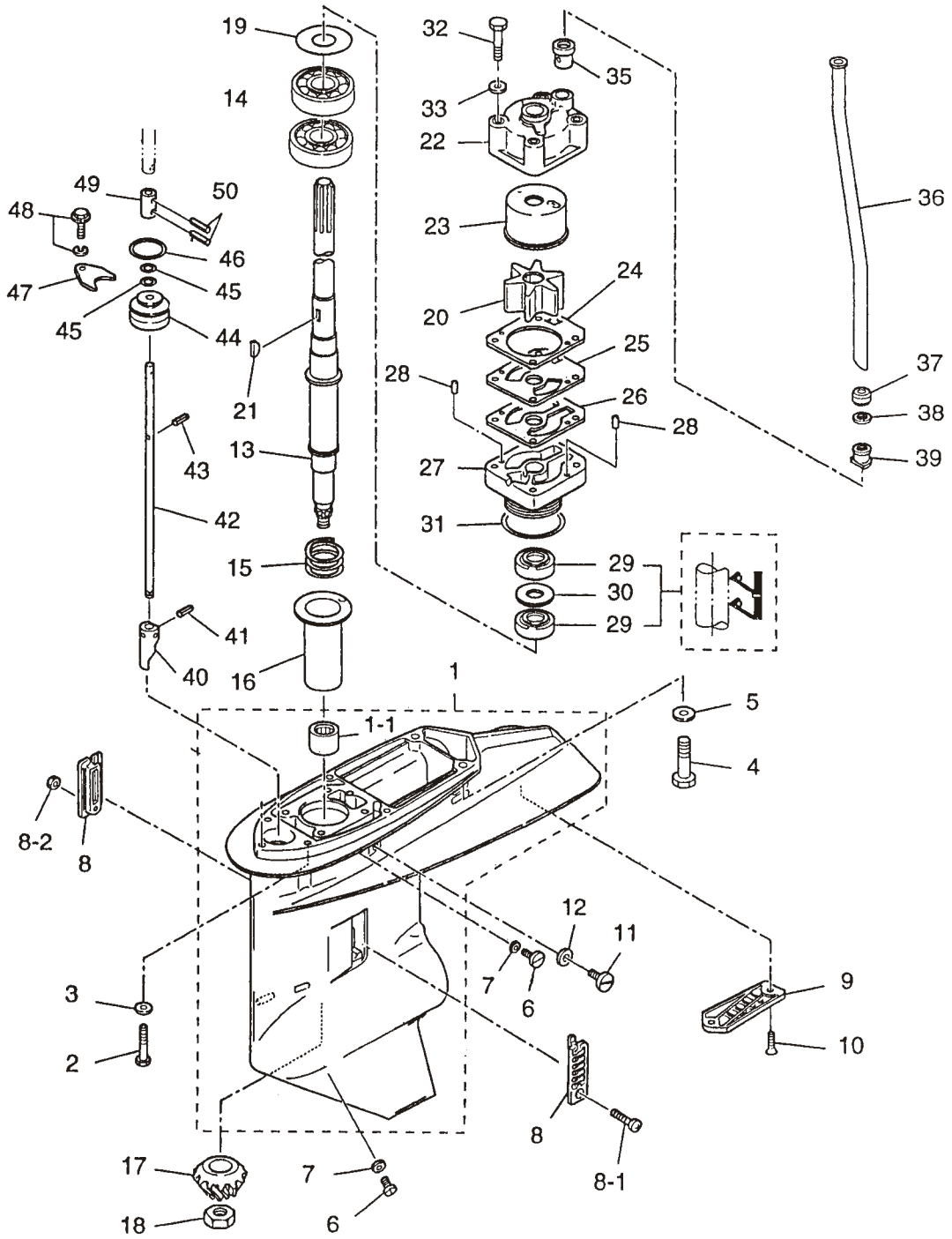

見出番号 Ref. No.	部品番号 Part No.	部　品　名 Description	個数 Q'ty WD 50 B		備　考 Remarks
1-25	3F3-65239-1	ｶﾞｲﾄﾞﾌﾟﾚｰﾄ (ｸﾛｰﾑﾒｯｷ) Guide Plate (Chrome Plated)	1		
1-26	3B7-65029-0	ｶﾞｲﾄﾞﾌﾟﾚｰﾄｶﾞｽｹｯﾄ Guide Plate Gasket	1		
1-27	3F3-65017-1	ﾎﾟﾝﾌﾟｹｰｽ (ﾛﾜ) Pump Case (Lower)	1		
1-28	334-65012-0	ﾀﾞｳｴﾙﾋﾟﾝ、4-10 Dowel Pin, 4-10	2		
1-29	3F3-60223-0	ｵｲﾙｼｰﾙ、22-37-8 Oil Seal, 22-37-8	2		
1-30	3F3-64084-0	ｽﾍﾟｰｻ、36.9-30-0.5 Spacer, 36.9-30-0.5	1		
1-31	345-65015-0	O ﾘﾝｸﾞ、3.2-47 O-Ring, 3.2-47	1		
1-32	916113-0880	ﾎﾞﾙﾄ、8-80 Bolt, 8-80	4		
1-33	940113-0800	ﾜｯｼｬ Washer	4		
1-35	3B7-65014-0	ｼｰﾙﾗﾊﾞﾛﾜ、ｳｫｰﾀﾊﾟｲﾌﾟ Seal Rubber Lower, Water Pipe	1		
1-36	3C8-65100-0	ｳｫｰﾀﾊﾟｲﾌﾟ S Water Pipe “S”	1		for Transom “L”
	3C8-65110-0	ｳｫｰﾀﾊﾟｲﾌﾟ L Water Pipe “L”	1		for Transom “UL”
1-37	345-65206-0	ｳｫｰﾀﾊﾟｲﾌﾟｼｰﾙ (ｱｯﾊﾟ) Water Pipe Seal (Upper)	1		
1-38	345-65205-0	ｶﾗｰ、18-20-4.5 Collar, 18-20-4.5	1		
1-39	346-65204-0	ｳｫｰﾀﾊﾟｲﾌﾟｵｰｸｼﾞｭｱﾘｰﾏｳﾝﾄ Water Pipe Auxiliary Mount	1		Water Pipe Locking Rubber
1-40	3S7-66011-0	ｸﾗｯﾁｶﾑ Clutch Cam	1		
1-41	951403-3514	ｽﾌﾟﾘﾝｸﾞﾋﾟﾝ、3.5-14 Spring Pin, 3.5-14	1		
1-42	3S7-66013-0	ｶﾑﾛｯﾄﾞ L Cam Rod “L”	1		
	3S7-66014-0	ｶﾑﾛｯﾄﾞ UL Cam Rod “UL”	1		
1-43	951403-3510	ｽﾌﾟﾘﾝｸﾞﾋﾟﾝ、3.5-10 Spring Pin, 3.5-10	1		
1-44	3B7-66031-1	ｶﾑﾛｯﾄﾞﾌﾞｯｼﾝｸﾞ Cam Rod Bushing	1		
1-45	345-66021-0	O ﾘﾝｸﾞ、1.9-6.8 O-Ring, 1.9-6.8	2		
1-46	3B7-66023-0	O ﾘﾝｸﾞ、3.5-27.7 O-Ring, 3.5-27.7	1		
1-47	353-66024-0	ｽﾄｯﾊﾟ Stopper	1		
1-48	910103-6612	ﾎﾞﾙﾄ Bolt	1		
1-49	3S7-66241-0	ｼﾌﾄﾛｯﾄﾞｼﾞｮｲﾝﾄ Shift Rod Joint	1		
1-50	951403-0312	ｽﾌﾟﾘﾝｸﾞﾋﾟﾝ、3-12 Spring Pin, 3-12	2		

ｷﾞﾔｹｰｽ（ﾌﾟﾛﾍﾟﾗｼｬﾌﾄ）

Fig.2 GEAR CASE (PROPELLER SHAFT)

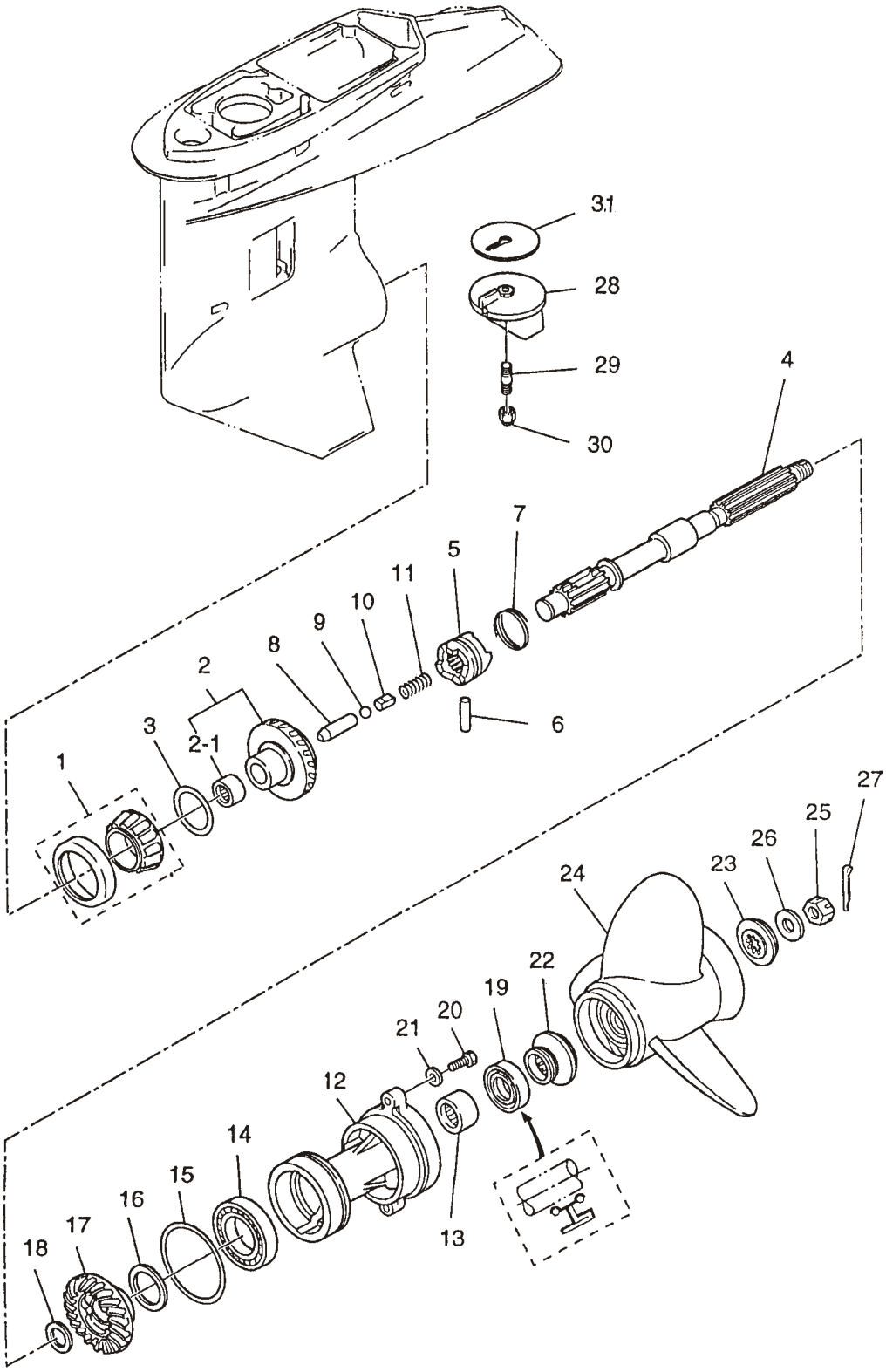

見出番号 Ref. No.	部品番号 Part No.	部　品　名 Description	個数 Q'ty WD 50 B		備　考 Remarks
2-1	3F3-60215-0	ﾃｰﾊﾟﾛｰﾗﾍﾞｱﾘﾝｸﾞ、32007JR Taper Roller Bearing, 32007 JR	1		
2-2	3F3-64010-3	ﾍﾞﾍﾞﾙｷﾞﾔ A Bevel Gear “A ”	1		
2-2-1	345-64011-0	ﾆｰﾄﾞﾙﾍﾞｱﾘﾝｸﾞ、202720 Needle Bearing, 202720	1		
2-3	353-64036-0	ｼﾑ、36-44-0.3 Shim, 36-44-0.3	AR		
	353-64037-0	ｼﾑ、36-44-0.15 Shim, 36-44-0.15	AR		
	353-64038-0	ｼﾑ、36-44-0.1 Shim, 36-44-0.1	AR		
2-4	3A3-64211-0	ﾌﾟﾛﾍﾟﾗｼｬﾌﾄ Propeller Shaft	1		
2-5	3F3-64215-0	ｸﾗｯﾁ Clutch	1		
2-6	353-64218-0	ｸﾗｯﾁ ﾋﾟﾝ Clutch Pin	1		
2-7	353-64219-2	ｸﾗｯﾁﾋﾟﾝｽﾅｯﾌﾟ Clutch Pin Snap	1		
2-8	353-64223-1	ｸﾗｯﾁﾌﾟｯｼｭﾛｯﾄﾞ Clutch Push Rod	1		
2-9	965002-0803	ｽﾁｰﾙﾎﾞｰﾙ、3/8 Steel Ball, 3/8	1		
2-10	3A3-64222-0	ｸﾗｯﾁｽﾌﾟﾘﾝｸﾞﾘﾃｰﾅ Clutch Spring Retainer	1		
2-11	346-64221-0	ｸﾗｯﾁｽﾌﾟﾘﾝｸﾞ Clutch Spring	1		
2-12	3A3Q60101-0	ﾌﾟﾛﾍﾟﾗｼｬﾌﾄﾊｳｼﾞﾝｸﾞ Propeller Shaft Housing	1		
2-13	353-60211-0	ﾆｰﾄﾞﾙﾍﾞｱﾘﾝｸﾞ、25-33-30 Needle Bearing, 25-33-30	1		
2-14	9601-0-6007	ﾎﾞｰﾙﾍﾞｱﾘﾝｸﾞ、6007 Ball Bearing, 6007	1		
2-15	353-60103-0	O ﾘﾝｸﾞ、3.5-74.6 O-Ring, 3.5-74.6	1		
2-16	353-64036-0	ｼﾑ、36-44-0.3 Shim, 36-44-0.3	1		
	353-64037-0	ｼﾑ、36-44-0.15 Shim, 36-44-0.15	AR		
	353-64038-0	ｼﾑ、36-44-0.1 Shim, 36-44-0.1	AR		
2-17	3F3-64030-0	ﾍﾞﾍﾞﾙｷﾞﾔ C Bevel Gear “C”	1		
2-18	353-64032-0	ﾜｯｼｬ、t = 3.0 Washer, t = 3.0	AR		
	353-64034-0	ﾜｯｼｬ、t = 2.75 Washer, t = 2.75	AR		
	353-64035-0	ﾜｯｼｬ、t = 2.5 Washer, t = 2.5	AR		
2-19	353-60111-0	ｵｲﾙｼｰﾙ、25-38-10 Oil Seal, 25-38-10	1		
2-20	3C7-60108-0	ﾎﾞﾙﾄ、8-30 ﾌﾟﾚｺｰﾄ Bolt, 8-30 Pre-coat	2		
2-21	940213-0800	ﾜｯｼｬ Washer	2		
2-22	353-64231-0	ｽﾗｽﾄﾎﾙﾀﾞ A Thrust Holder “A”	1		
2-23	353-64233-0	ｽﾄｯﾊﾟ A Stopper “A”	1		

ｷﾞﾔｹｰｽ（ﾌﾟﾛﾍﾟﾗｼｬﾌﾄ）

Fig.2 GEAR CASE (PROPELLER SHAFT)

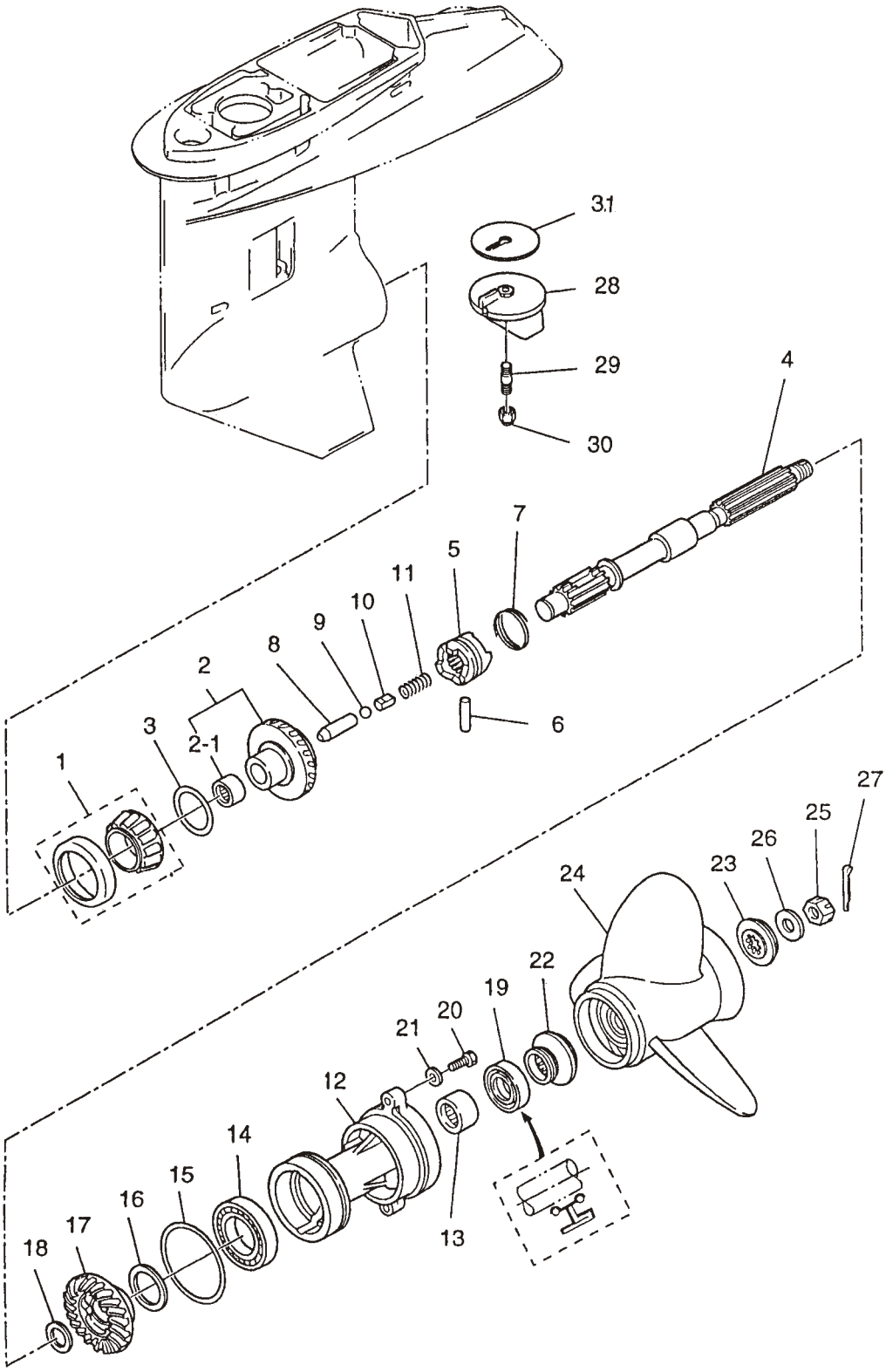

見出番号 Ref. No.	部品番号 Part No.	部　品　名 Description	個数 Q'ty WD 50 B		備　考 Remarks
2-24	353W64101-0	ﾌﾟﾛﾍﾟﾗ 9 (3X305X229) Propeller 9 (3X12.0X9.0)	1		
	353W64102-0	ﾌﾟﾛﾍﾟﾗ 10 (3x292x254) Propeller 10 (3x11.5x10.0)	1		
	353W64103-0	ﾌﾟﾛﾍﾟﾗ 11 (3x292x279) Propeller 11 (3x11.5x11.0)	1		
	353W64104-0	ﾌﾟﾛﾍﾟﾗ 12 (3x295x305) Propeller 12 (3x11.6x12.0)	1		STD
	353W64105-0	ﾌﾟﾛﾍﾟﾗ 13 (3x292x330) Propeller 13 (3x11.5x13.0)	1		
	353W64106-0	ﾌﾟﾛﾍﾟﾗ 14 (3x289x355) Propeller 14 (3x11.4x14.0)	1		
	353W64107-0	ﾌﾟﾛﾍﾟﾗ 15 (3x280x381) Propeller 15 (3x11.0x15.0)	1		
	353W64108-0	ﾌﾟﾛﾍﾟﾗ 16.5 (3x273x417) Propeller 16.5 (3x10.7x16.4)	1		
	353W64109-0	ﾌﾟﾛﾍﾟﾗ 17.5 (3x276x447) Propeller 17.5 (3x10.9x17.6)	1		
2-25	353-64121-0	ﾌﾟﾛﾍﾟﾗﾅｯﾄ Propeller Nut	1		
2-26	345-64124-0	ﾜｯｼｬ、17-32-3 Washer, 17-32-3	1		
2-27	951503-0325	ｽﾌﾟﾘｯﾄﾋﾟﾝ、3-25 Split Pin, 3-25	1		
2-28	3B7-60217-1	ﾄﾘﾑﾀﾌﾞ Trim Tab	1		
2-29	915313-0825	ｽﾀｯﾄﾞﾎﾞﾙﾄ Stud Bolt	1		
2-30	930403-0800	ﾅｲﾛﾝﾅｯﾄ、8 P1.25 Nylon Nut, 8 P1.25	1		
2-31	3B7-60219-0	ﾄﾘﾑﾀﾌﾞｶﾞｽｹｯﾄ Trim Tab Gasket	1		

ﾄﾞﾗｲﾌﾞｼｬﾌﾄﾊｳｼﾝｸﾞ
Fig.3 DRIVE SHAFT HOUSING

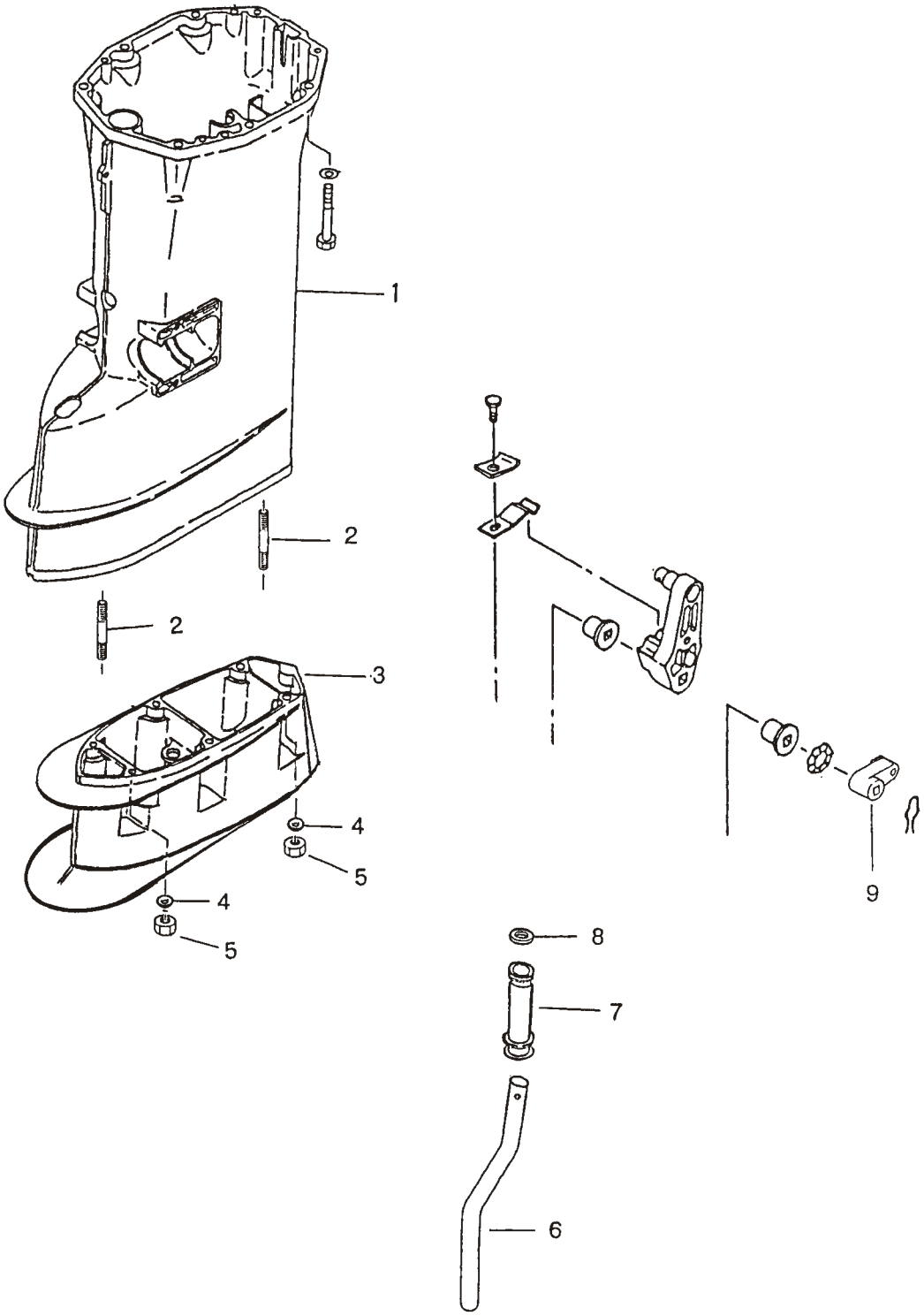

見出番号 Ref. No.	部品番号 Part No.	部　品　名 Description	個数 Q'ty WD 50 B		備　考 Remarks
3-1	3C8Q61191-1	ﾄﾞﾗｲﾌﾞｼｬﾌﾄﾊｳｼﾞﾝｸﾞ S Drive Shaft Housing “S”	1		for Transom “L”
	3C8Q61192-0	ﾄﾞﾗｲﾌﾞｼｬﾌﾄﾊｳｼﾞﾝｸﾞ L Drive Shaft Housing “L”	1		for Transom “UL”
3-2	915313-0825	ｽﾀｯﾄﾞﾎﾞﾙﾄ Stud Bolt	6		
3-3	3S7Q61110-0	ｴｸｽﾃﾝｼｮﾝﾊｳｼﾞﾝｸﾞ Extension Housing	1		
3-4	940213-0800	ﾜｯｼｬ Washer	6		
3-5	930113-0800	ﾅｯﾄ Nut	6		
3-6	3S7-60252-0	ｴｸｽﾃﾝｼｮﾝﾊﾟｲﾌﾟ Extension Pipe	1		
3-7	3S7-60251-0	ﾁｭｰﾌﾞｼﾞｮｲﾝﾄ Tube Joint	1		
3-8	345-65205-0	ｶﾗｰ、18-20-4.5 Collar, 18-20-4.5	1		
3-9	3S7-66225-0	ｼﾌﾄﾛｯﾄﾞﾚﾊﾞｰ Shift Rod Lever	1		

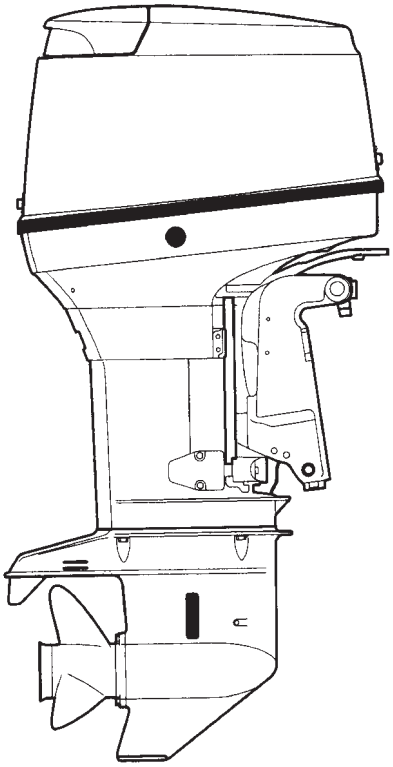

TLDI

70B
90B

目　　次
CONTENTS

Fig. 1	ｼﾘﾝﾀﾞｰ・ｸﾗﾝｸｹｰｽ CYLINDER・CRANK CASE	1
Fig. 2	ﾋﾟｽﾄﾝ・ｸﾗﾝｸｼｬﾌﾄ PISTON・CRANK SHAFT	7
Fig. 3	ｴｱﾁｬﾝﾊﾞ（ｴｱﾎﾞｯｸｽ） AIR CHAMBER (AIR BOX)	9
Fig. 4	ｴｱﾚｰﾙ AIR RAIL	11
Fig. 5	FFPｱｯｼ FFP ASS'Y	15
Fig. 6	ﾍﾞｰﾊﾟｾﾊﾟﾚｰﾀ & ﾌｭｴﾙﾗｲﾝ VAPOR SEPARATOR & FUEL LINE	17
Fig. 7	ｽﾛｯﾄﾙ THROTTLE	21
Fig. 8	ﾏｸﾞﾈﾄ MAGNETO	25
Fig. 9	ｴﾚｸﾄﾘｯｸﾊﾟｰﾂ（ ECU & ﾀﾞｲﾔｸﾞﾗﾑ ） ELECTRIC PARTS (ECU & DIAGRAM)	27
Fig. 10	ｴﾚｸﾄﾘｯｸﾊﾟｰﾂ（ ｽﾀｰﾀﾓｰﾀ ） ELECTRIC PARTS (STARTER MOTOR)	31
Fig. 11	ｴｱｺﾝﾌﾟﾚｯｻ AIR COMPRESSOR	35
Fig. 12	ｵｲﾙﾎﾟﾝﾌﾟ OIL PUMP	39
Fig. 13	ﾄﾞﾗｲﾌﾞｼｬﾌﾄﾊｳｼﾝｸﾞ DRIVE SHAFT HOUSING	43
Fig. 14	ｷﾞﾔｹｰｽ（ﾄﾞﾗｲﾌﾞｼｬﾌﾄ） GEAR CASE (DRIVE SHAFT)	47
Fig. 15	ｷﾞﾔｹｰｽ（ﾌﾟﾛﾍﾟﾗｼｬﾌﾄ） GEAR CASE (PROPELLER SHAFT)	53
Fig. 16	ｼﾌﾄ SHIFT	57
Fig. 17	ﾌﾞﾗｹｯﾄ BRACKET	59

Fig. 18	ﾊﾟﾜｰﾄﾘﾑ & ﾁﾙﾄ POWER TRIM & TILT	65
Fig. 19	ﾎﾞﾄﾑｶｳﾙ (ﾓｰﾀｰｶﾊﾞｰﾛﾜ) BOTTOM COWL (MOTOR COVER LOWER)	69
Fig. 20	ﾄｯﾌﾟｶｳﾙ (ﾓｰﾀｰｶﾊﾞｰｱｯﾊﾟ) TOP COWL (MOTOR COVER UPPER)	71
Fig. 21	ｾﾊﾟﾚｰﾄﾌｭｴﾙﾀﾝｸ SEPARATE FUEL TANK	73
Fig. 22	ｱｸｾｻﾘｰ ACCESSORIES	75
Fig. 23	ｵﾌﾟｼｮﾅﾙﾊﾟｰﾂ (1) OPTIONAL PARTS (1)	77
Fig. 24	ｵﾌﾟｼｮﾅﾙﾊﾟｰﾂ (2) (P ﾀｲﾌﾟ) OPTIONAL PARTS (2) (P Type)	81
Fig. 25	ｵﾌﾟｼｮﾅﾙﾊﾟｰﾂ (3) (P ﾀｲﾌﾟ) OPTIONAL PARTS (3) (P Type)	83
Fig. 26	ｱｯｾﾝﾌﾞﾘ・ｷｯﾄ ASSEMBLY・KIT	85

シリンダ・クランクケース

Fig.1 CYLINDER・CRANK CASE

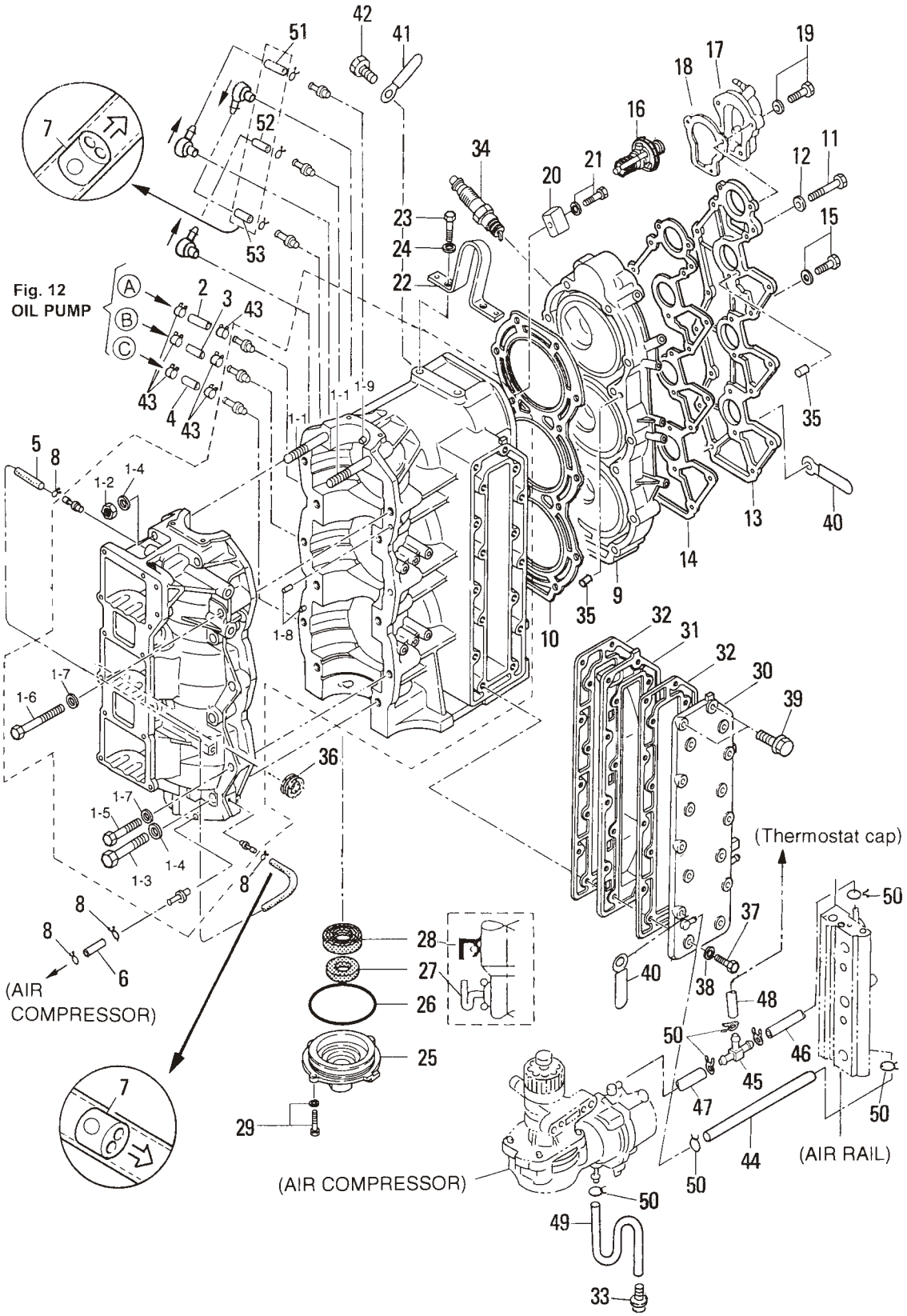

見出番号 Ref. No.	部品番号 Part No.	部　品　名 Description	個数 Q'ty D 90 B	個数 Q'ty D 70 B	備　考 Remarks
1-1	3Y9B01100-1	ｼﾘﾝﾀﾞｰ･ｸﾗﾝｸｹｰｽ Cylinder-Crank Case	1	1	70B # 70242～ 90B # 00766～
	3T7B01100-0	ｼﾘﾝﾀﾞｰ･ｸﾗﾝｸｹｰｽ Cylinder-Crank Case	(1)	(1)	70A2 # 70052～# 70241 90A2 # 00516～# 00765
1-1-1	915324-1065	ｽﾀｯﾄﾞﾎﾞﾙﾄ ＊ Stud Bolt	2	2	
1-1-2	931121-1000	ﾅｯﾄ、10-P1.25 ＊ Nut, 10-P1.25	2	2	
1-1-3	916129-1065	ﾎﾞﾙﾄ ＊ Bolt	6	6	
1-1-4	3B7-01116-0	ﾜｯｼｬ、10.5-20-3.2 ＊ Washer, 10.5-20-3.2	8	8	
1-1-5	916124-0850	ﾎﾞﾙﾄ ＊ Bolt	5	5	
1-1-6	916124-0865	ﾎﾞﾙﾄ ＊ Bolt	1	1	
1-1-7	345-01015-0	ﾜｯｼｬ、8.5-19.5-3.2 ＊ Washer, 8.5-19.5-3.2	6	6	
1-1-8	345-01111-0	ﾀﾞｳｴﾙﾋﾟﾝ、6-12 ＊ Dowel Pin, 6-12	2	2	
1-1-9	3T9-00117-0	ﾒｲﾝﾍﾞｱﾘﾝｸﾞﾀﾞｳｴﾙﾋﾟﾝ ＊ Main Bearing Dowel Pin	1	1	
1-2	99AA-2-0370	ｵｲﾙﾊﾟｲﾌﾟ Oil Pipe	1	1	ｵｲﾙﾎﾟﾝﾌﾟ～# 1 ｼﾘﾝﾀﾞｰ Oil Pump to # 1 Cylinder
1-3	99AA-2-0260	ｵｲﾙﾊﾟｲﾌﾟ Oil Pipe	1	1	ｵｲﾙﾎﾟﾝﾌﾟ～# 2 ｼﾘﾝﾀﾞｰ Oil Pump to # 2 Cylinder
1-4	99AA-2-0180	ｵｲﾙﾊﾟｲﾌﾟ Oil Pipe	1	1	ｵｲﾙﾎﾟﾝﾌﾟ～# 3 ｼﾘﾝﾀﾞｰ Oil Pump to # 3 Cylinder
1-5	98AL-4-0520	ﾙﾌﾞﾘｹｰｼｮﾝﾊﾟｲﾌﾟ D Lubrication Pipe “D”	1	1	
1-6	98AL-4-0380	ｵｲﾙﾊﾟｲﾌﾟ Oil Pipe	1	1	
1-7	393-01160-0	ﾗｲﾝﾁｪｯｸﾊﾞﾙﾌﾞ Line Check Valve	4	4	
1-8	338-01133-0	ｸﾘｯﾌﾟ、φ7 Clip, φ7	10	10	
1-9	3T9B01001-1	ｼﾘﾝﾀﾞﾍｯﾄﾞ Cylinder Head	1	1	
1-10	3T9-01005-0	ｼﾘﾝﾀﾞﾍｯﾄﾞｶﾞｽｹｯﾄ Cylinder Head Gasket	1	1	
1-11	916129-0875	ﾎﾞﾙﾄ Bolt	14	14	
1-12	345-01015-0	ﾜｯｼｬ、8.5-19.5-3.2 Washer, 8.5-19.5-3.2	14	14	
1-13	3T9B01021-0	ｼﾘﾝﾀﾞﾍｯﾄﾞｶﾊﾞｰ Cylinder Head Cover	1	1	
1-14	3T9-01024-0	ｼﾘﾝﾀﾞﾍｯﾄﾞｶﾊﾞｰｶﾞｽｹｯﾄ Cylinder Head Cover Gasket	1	1	
1-15	910121-7625	ﾎﾞﾙﾄ Bolt	3	3	
1-16	3C7-01030-0	ｻｰﾓｽﾀｯﾄ Thermostat	1	1	70B # 70242～ 90B # 00766～
	3T9-01030-0	ｻｰﾓｽﾀｯﾄ Thermostat	(1)	(1)	～70A2 # 70241 ～90A2 # 00765
1-17	3T9B01060-0	ｻｰﾓｽﾀｯﾄｷｬｯﾌﾟ Thermostat Cap	1	1	70A2 # 70052～ 90A2 # 00516～
1-18	3T9-01032-0	ｻｰﾓｽﾀｯﾄｷｬｯﾌﾟｶﾞｽｹｯﾄ Thermostat Cap Gasket	1	1	
1-19	910113-5640	ﾎﾞﾙﾄ Bolt	3	3	

シリンダ・クランクケース

Fig.1 CYLINDER・CRANK CASE

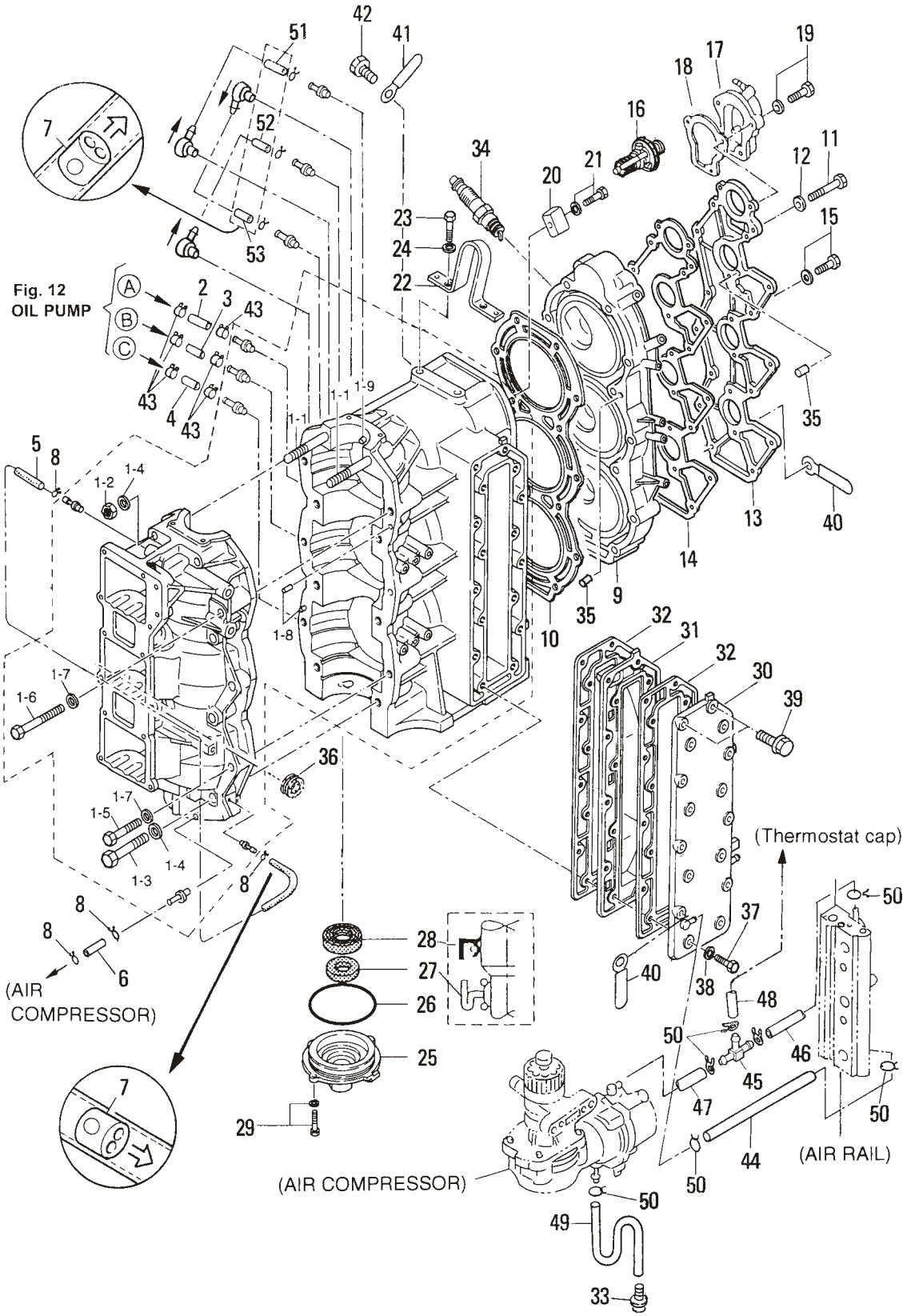

見出番号 Ref. No.	部品番号 Part No.	部　品　名 Description	個数 Q'ty D 90 B	D 70 B	備　考 Remarks
1-20	3B7-60218-1	ｱﾉｰﾄﾞ Anode	1	1	
1-21	910103-5630	ﾎﾞﾙﾄ Bolt	1	1	
1-22	3B7B01513-0	ﾊﾝｶﾞ Hanger	1	1	
1-23	910114-0820	ﾎﾞﾙﾄ Bolt	2	2	
1-24	941322-0800	ｽﾌﾟﾘﾝｸﾜｯｼｬ Spring Washer	2	2	
1-25	3B7-01291-1	ｸﾗﾝｸｹｰｽﾍｯﾄﾞ Crank Case Head	1	1	
1-26	171-00053-0	O ﾘﾝｸﾞ、2-74.5 O-Ring, 2-74.5	1	1	
1-27	3C7-01215-0	ｵｲﾙｼｰﾙ、19.6-35-10 Oil Seal, 19.6-35-10	1	1	
1-28	3T9-00121-0	ｵｲﾙｼｰﾙ、35-58-9 Oil Seal, 35-58-9	1	1	
1-29	910113-5620	ﾎﾞﾙﾄ Bolt	2	2	
1-30	3T9B02300-0	ｴｷｿﾞｰｽﾄｶﾊﾞｰ (ｱｳﾀ) Exhaust Cover (Outer)	1	1	
1-31	3B7B02302-0	ｴｷｿﾞｰｽﾄｶﾊﾞｰ (ｲﾝﾅ) Exhaust Cover (Inner)	1	1	
1-32	3B7-02305-1	ｴｷｿﾞｰｽﾄｶﾊﾞｰｶﾞｽｹｯﾄ Exhaust Cover Gasket	2	2	
1-33	353-01138-0	ｳｫｰﾀﾆｯﾌﾟﾙ Water Nipple	1	1	
1-34	9701-1-1109	ｽﾊﾟｰｸﾌﾟﾗｸﾞ、NGK: IZFR5J Spark Plug, NGK: IZFR5J	3	3	# 033166XD～
	9701-1-4016	ｽﾊﾟｰｸﾌﾟﾗｸﾞ、ﾁｬﾝﾋﾟｵﾝ: RC10ECC Spark Plug, CHAMPION: RC10ECC	(3)	(3)	～70A2 # 70241 ～90A2 # 00765
1-35	334-65012-0	ﾀﾞｳｴﾙﾋﾟﾝ、4-10 Dowel Pin, 4-10	4	4	
1-36	3B7-76093-0	ｸﾞﾛﾒｯﾄ、25-5 Grommet, 25-5	1	1	
1-37	910114-0835	ﾎﾞﾙﾄ Bolt	14	14	
1-38	940121-0800	ﾜｯｼｬ Washer	14	14	
1-39	910113-5840	ﾎﾞﾙﾄ Bolt	2	2	
1-40	3T5-06971-0	ｸﾗﾝﾌﾟ、8.5-85P Clamp, 8.5-85P	2	2	
1-41	309-06972-0	ｸﾗﾝﾌﾟ、6.5-47.5P Clamp, 6.5-47.5P	6	6	
1-42	910103-6612	ﾎﾞﾙﾄ Bolt	6	6	
1-43	3B7-09052-0	ｸﾘｯﾌﾟ、φ6.9 Clip, φ6.9	6	6	
1-44	98AB-5-0290	ｳｫｰﾀﾊﾟｲﾌﾟ Water Pipe	1	1	
1-45	3T7-01175-0	T ﾆｯﾌﾟﾙ (ﾊﾞﾙﾌﾞ付) T-Nipple (with Valve)	1	1	70A2 # 70052～ 90A2 # 00516～
1-46	98AB-5-0065	ｺﾞﾑﾎｰｽ Rubber Hose	1	1	ｴｱﾚｰﾙ～T ﾆｯﾌﾟﾙ Air rail to T-Nipple
1-47	98AB-5-0065	ｺﾞﾑﾎｰｽ Rubber Hose	1	1	T ﾆｯﾌﾟﾙ～ｺﾝﾌﾟﾚｯｻ T-Nipple to Compressor
1-48	98AB-5-0115	ｺﾞﾑﾎｰｽ Rubber Hose	1	1	T ﾆｯﾌﾟﾙ～ｻｰﾓｽﾀｯﾄｷｬｯﾌﾟ T-Nipple to Cap, Thermostat

シリンダ・クランクケース
Fig.1 CYLINDER・CRANK CASE

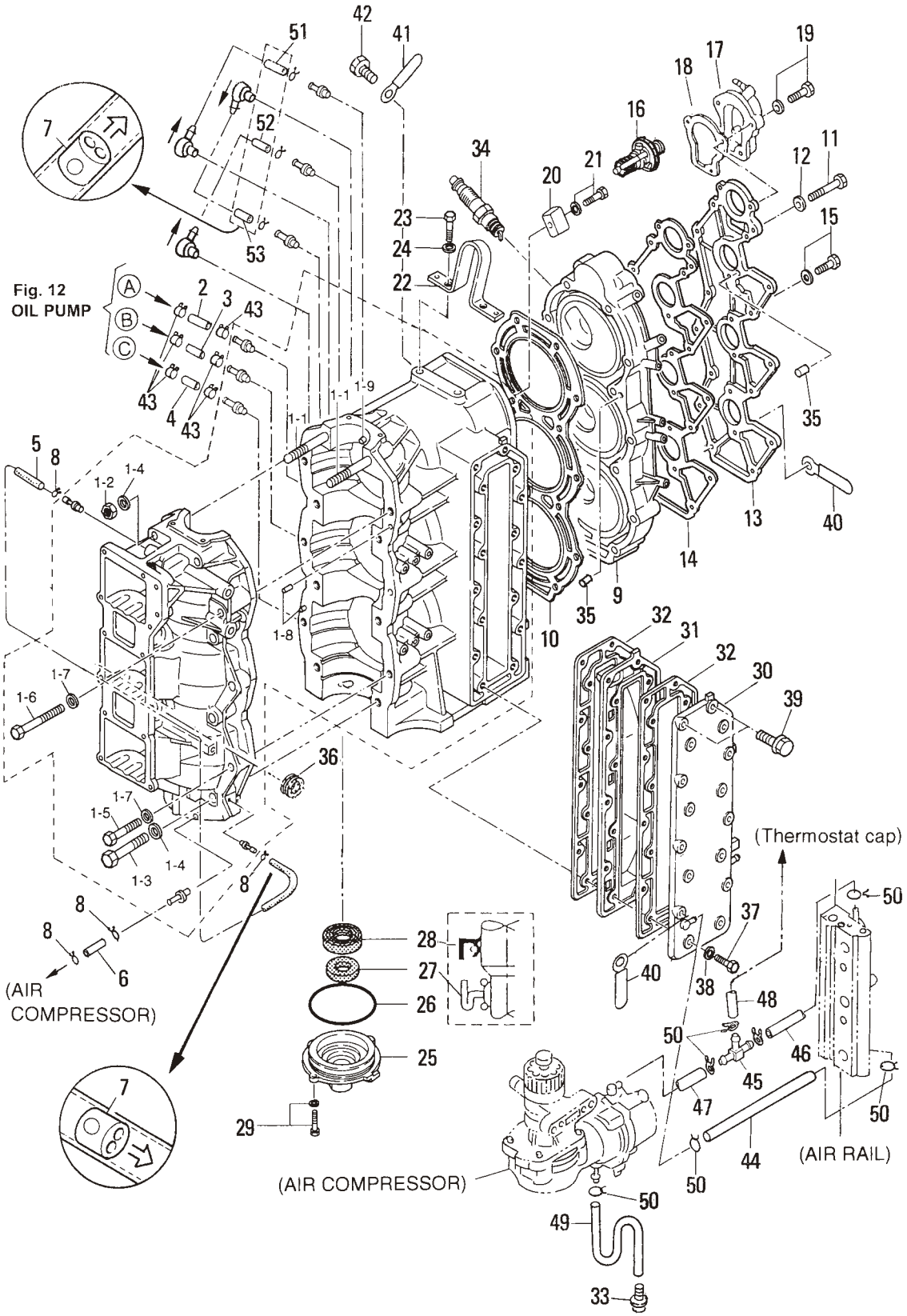

見出番号 Ref. No.	部品番号 Part No.	部　品　名 Description	個数 Q'ty D 90 B	個数 Q'ty D 70 B	備　考 Remarks
1-49	98AB-5-0290	ｺﾞﾑﾎｰｽ Rubber Hose	1	1	
1-50	338-02215-0	ｸﾘｯﾌﾟ、φ10 Clip, φ10	7	7	
1-51	98AL-4-0185	ｺﾞﾑﾊﾟｲﾌﾟ（＃2掃気通路～＃1 ｼﾘﾝﾀﾞ） Lubrication Pipe	1	1	# 2 Transfer Passage to # 1 Cylinder
1-52	98AL-4-0185	ｺﾞﾑﾎｰｽ（＃3掃気通路～＃2 ｼﾘﾝﾀﾞ） Rubber Hose	1	1	# 3 Transfer Passage to # 2 Cylinder
1-53	98AL-4-0185	ｺﾞﾑﾎｰｽ（＃1掃気通路～＃3 ｼﾘﾝﾀﾞ） Rubber Hose	1	1	# 1 Transfer Passage to # 3 Cylinder

ﾋﾟｽﾄﾝ・ｸﾗﾝｸｼｬﾌﾄ
Fig.2 PISTON・CRANK SHAFT

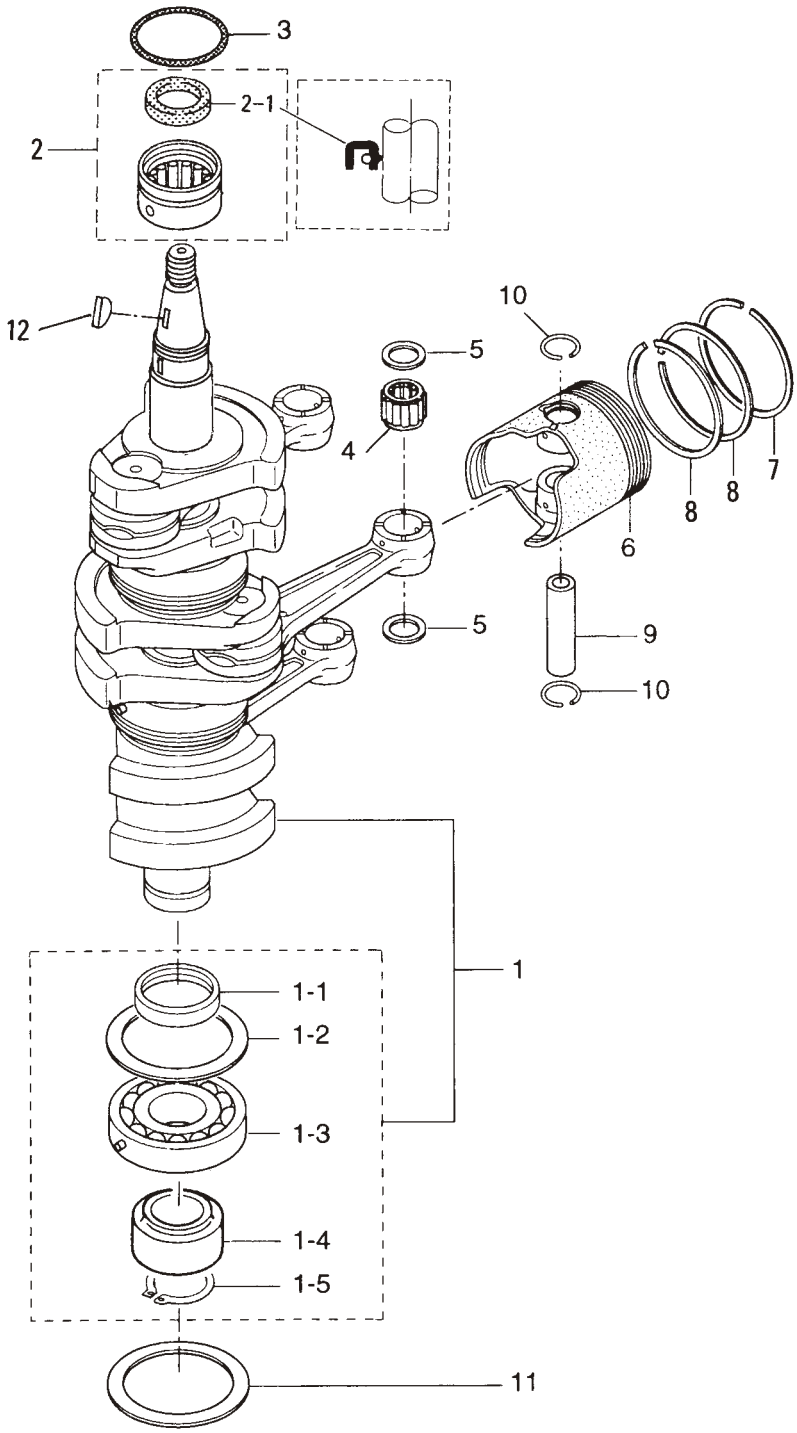

見出番号 Ref. No.	部品番号 Part No.	部　品　名 Description	個数 Q'ty D 90 B	個数 Q'ty D 70 B	備　考 Remarks
2-1	3T7-00030-0	ｸﾗﾝｸｼｬﾌﾄｱｯｼ Crankshaft Ass'y	1	1	70A2#70052～ 90A2#00516～
2-1-1	3B7-00116-0	ｽﾍﾟｰｻ、40-52-7 ＊ Spacer, 40-52-7	1	1	
2-1-2	3B7-00115-0	ﾜｯｼｬ、66-85-2 ＊ Washer, 66-85-2	1	1	
2-1-3	9603-3-6208	ﾍﾞｱﾘﾝｸﾞ、6208 ＊ Bearing, 6208	1	1	
2-1-4	3T7-00119-0	ｽﾍﾟｰｻ、35-48.6-16 ＊ Spacer, 35-48.6-16	1	1	70A2#70052～ 90A2#00516～
2-1-5	945107-3500	C ﾘﾝｸﾞ、d=35 ＊ C-Ring, d=35	1	1	
2-2	3T5-00113-0	ﾒｲﾝﾍﾞｱﾘﾝｸﾞ（ｱｯﾊﾟ） Main Bearing (Upper)	1	1	
2-2-1	3T5-00121-0	ｵｲﾙｼｰﾙ、36-46-6 ＊ Oil Seal, 36-46-6	1	1	
2-3	353-00108-0	O ﾘﾝｸﾞ、2.4-44.7 O-Ring, 2.4-44.7	1	1	
2-4	3C7-00042-0	ﾆｰﾄﾞﾙﾍﾞｱﾘﾝｸﾞ、20-25-28 Needle Bearing, 20-25-28	3	3	
2-5	353-00046-0	ｽﾓｰﾙｴﾝﾄﾞﾍﾞｱﾘﾝｸﾞﾜｯｼｬ Small End Bearing Washer	6	6	
2-6	3Y9-00001-0	ﾋﾟｽﾄﾝ (STD) Piston (STD)	3	3	70B # 70242～ 90B # 00766～
	3Y9-00004-0	ﾋﾟｽﾄﾝ (0.5mm O/S) Piston (0.5mm O/S)	3	3	70B # 70242～ 90B # 00766～
2-7	3B7-00011-0	ﾋﾟｽﾄﾝﾘﾝｸﾞ 1st (STD) Piston Ring 1st (STD)	3	3	
	3B7-00014-0	ﾋﾟｽﾄﾝﾘﾝｸﾞ 1st (0.5mm O/S) Piston Ring 1st (0.5mm O/S)	3	3	
2-8	3B7-00012-0	ﾋﾟｽﾄﾝﾘﾝｸﾞ 2nd (STD) Piston Ring 2nd (STD)	6	6	
	3B7-00015-0	ﾋﾟｽﾄﾝﾘﾝｸﾞ 2nd (0.5mm O/S) Piston Ring 2nd (0.5mm O/S)	6	6	
2-9	360-00021-0	ﾋﾟｽﾄﾝﾋﾟﾝ Piston Pin	3	3	
2-10	353-00024-1	ﾋﾟｽﾄﾝﾋﾟﾝｸﾘｯﾌﾟ Piston Pin Clip	6	6	
2-11	3B7-00115-0	ﾜｯｼｬ、66-85-2 Washer, 66-85-2	1	1	
2-12	334-00131-0	ﾏｸﾞﾈﾄｷｰ Magneto Key	1	1	

エアチャンバ（エアボックス）
Fig.3　AIR CHAMBER (AIR BOX)

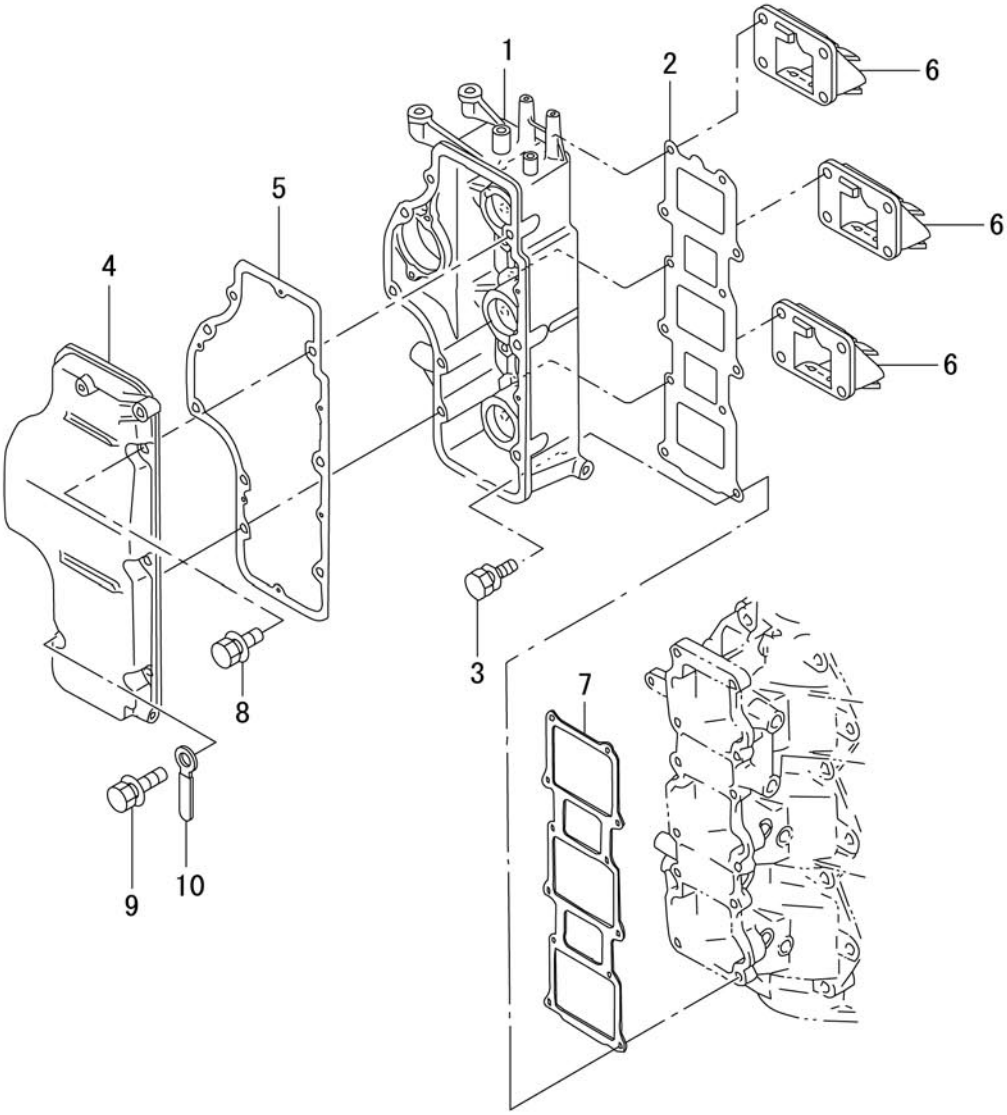

見出番号 Ref. No.	部品番号 Part No.	部　品　名 Description	個数 Q'ty D 90 B	個数 Q'ty D 70 B	備　考 Remarks
3-1	3T9B02243-0	ｴｱﾁｬﾝﾊﾞ Air Chamber	1	1	
3-2	3T9-02242-0	ｴｱﾁｬﾝﾊﾞｶﾞｽｹｯﾄ Air Chamber Gasket	1	1	
3-3	3T5-02241-0	ﾎﾞﾙﾄ、6-25 ﾌﾟﾚｺｰﾄ Bolt, 6-25 Pre-coated	12	12	
3-4	3T9B02244-0	ｴｱﾁｬﾝﾊﾞｶﾊﾞｰ Air Chamber Cover	1	1	
3-5	3T9-02245-0	ｴｱﾁｬﾝﾊﾞｶﾊﾞｰｶﾞｽｹｯﾄ Air Chamber Cover Gasket	1	1	
3-6	3A3-02100-0	ﾘｰﾄﾞﾊﾞﾙﾌﾞｱｯｼ Reed Valve Ass'y	3	3	
3-7	3T9-02104-0	ｲﾝﾃｰｸﾏﾆﾎｰﾙﾄﾞｶﾞｽｹｯﾄ Intake Manifold Gasket	1	1	
3-8	910113-5625	ﾎﾞﾙﾄ Bolt	6	6	
3-9	910103-5645	ﾎﾞﾙﾄ Bolt	2	2	
3-10	3Z5-06972-0	ｸﾗﾝﾌﾟ、6.5-120P Clamp, 6.5-120P	1	1	

エアレール
Fig.4 AIR RAIL

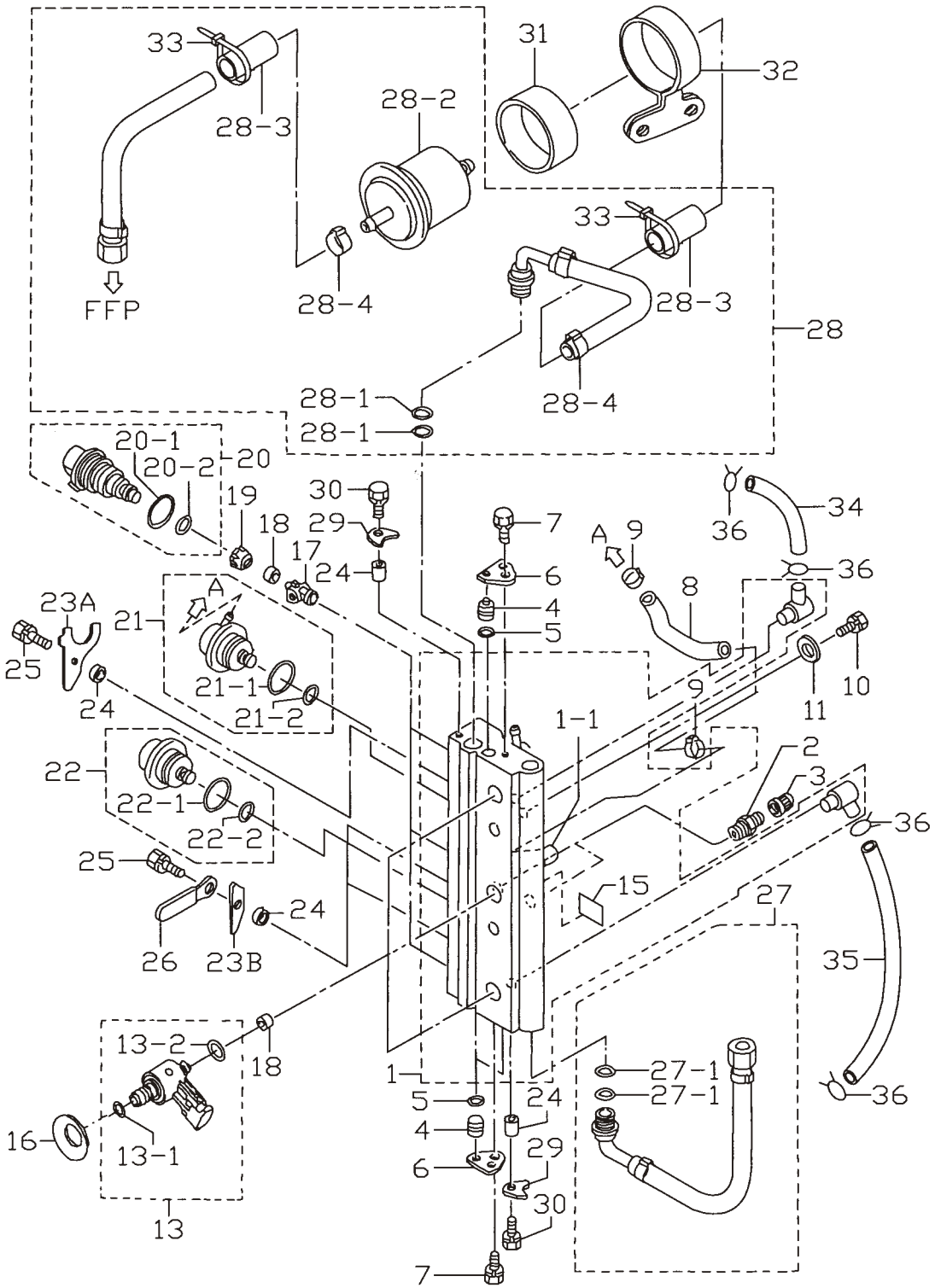

見出番号 Ref. No.	部品番号 Part No.	部　品　名 Description	個数 Q'ty D 90 B	D 70 B	備　考 Remarks
4-1	3T9-10080-0	ｴｱﾚｰﾙ Air Rail	1	1	
4-1-1	3T5-10166-0	L ﾆｯﾌﾟﾙ ＊ L-Nipple	1	1	
4-2	3T5-10098-0	ﾊﾞﾙﾌﾞ Valve	2	2	
4-3	3T5-10099-0	ﾊﾞﾙﾌﾞｷｬｯﾌﾟ Valve Cap	2	2	
4-4	3T5-10167-0	ﾌﾟﾗｸﾞ、φ10.5 Plug, φ10.5	3	3	
4-5	3T5-10164-0	O ﾘﾝｸﾞ、1.9-6.8 O-Ring, 1.9-6.8	3	3	
4-6	3T5-10165-0	ﾌﾟﾗｸﾞｽﾄｯﾊﾟ Plug Stopper	2	2	
4-7	910103-6612	ﾎﾞﾙﾄ Bolt	4	4	
4-8	98AJ-4-0105	ｴｱﾎｰｽ Air Hose	1	1	
4-9	3T5-10091-0	ｸﾗﾝﾌﾟ、29/64 Clamp, 29/64	2	2	
4-10	910103-0865	ﾎﾞﾙﾄ Bolt	2	2	
4-11	940103-0800	ﾜｯｼｬ Washer	2	2	
4-13	3Y7-10310-0	ｴｱｲﾝｼﾞｪｸﾀ Air Injector	3	3	70B # 70242～ 90B # 00766～
4-13-1	3T5-10317-0	O ﾘﾝｸﾞ、5-52（φ1-10） ＊ O-Ring, 5-52（φ1-10）	3	3	
4-13-2	3Y9-10311-0	O ﾘﾝｸﾞ、2.4-9.6（φ2.4-14.2） ＊ O-Ring, 2.4-9.6（φ2.4-14.2）	3	3	70B # 70242～ 90B # 00766～
4-15	3T5-72196-0	ｴｱﾚｰﾙﾃﾞｶﾙ Air Rail Decal	1	1	
4-16	3Y9-10312-0	ｴｱｲﾝｼﾞｪｸﾀﾃﾞｨｽｸｽﾌﾟﾘﾝｸﾞ Air Injector Disc Spring	3	3	70B # 70242～ 90B # 00766～
4-17	3T5-10314-0	ﾌｭｴﾙｲﾝｼﾞｪｸﾀｲﾝｻｰﾄ Fuel Injector Insert	3	3	
4-18	3T5-10316-0	ｺﾝﾌﾟﾚｯｼｮﾝｼｰﾙ Compression Seal	6	6	
4-19	3T5-10315-0	ﾌｭｴﾙｲﾝｼﾞｪｸﾀｱﾀﾞﾌﾟﾀ Fuel Injector Adapter	3	3	
4-20	3T5-10300-0	ﾌｭｴﾙｲﾝｼﾞｪｸﾀ Fuel Injector	3	3	
4-20-1	3T5-10304-0	O ﾘﾝｸﾞ、2.8-20.2 ＊ O-Ring, 2.8-20.2	3	3	
4-20-2	3T5-10303-0	O ﾘﾝｸﾞ、3.5-7.5 ＊ O-Ring, 3.5-7.5	3	3	
4-21	3T5-10148-0	ﾌｭｴﾙﾚｷﾞｭﾚｰﾀ Fuel Regulator	1	1	
4-21-1	3T5-10095-0	O ﾘﾝｸﾞ、2.5-20 ＊ O-Ring, 2.5-20	1	1	
4-21-2	3T5-10094-0	O ﾘﾝｸﾞ、2.5-5 ＊ O-Ring, 2.5-5	1	1	
4-22	3T5-10090-0	ｴｱﾚｷﾞｭﾚｰﾀ Air Regulator	1	1	
4-22-1	3T5-10095-0	O ﾘﾝｸﾞ、2.5-20 ＊ O-Ring, 2.5-20	1	1	
4-22-2	3T5-10094-0	O ﾘﾝｸﾞ、2.5-5 ＊ O-Ring, 2.5-5	1	1	
4-23A	3Y9-10302-0	ﾌｭｴﾙｲﾝｼﾞｪｸﾀﾎｰﾙﾃﾞｨﾝｸﾞﾌﾟﾚｰﾄ Fuel Injector Holding Plate	1	1	

エアレール
Fig.4 AIR RAIL

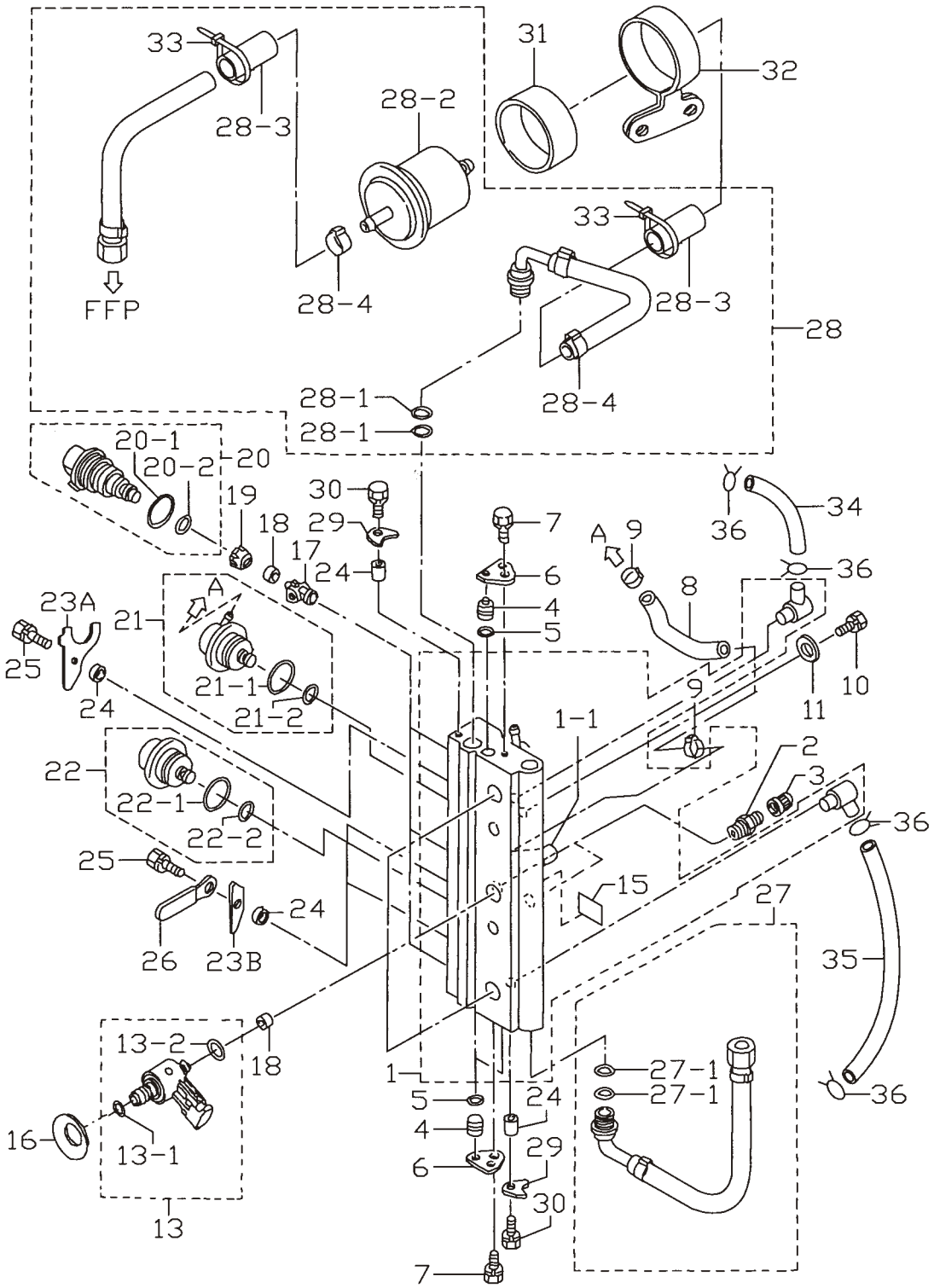

見出番号 Ref. No.	部品番号 Part No.	部　品　名 Description	個数 Q'ty D 90 B	個数 Q'ty D 70 B	備　考 Remarks
4-23B	3T5-10302-0	ﾌｭｴﾙｲﾝｼﾞｪｸﾀﾎｰﾙﾃﾞｨﾝｸﾞﾌﾟﾚｰﾄ Fuel Injector Holding Plate	2	2	
4-24	3T5-10153-0	ｶﾗｰ、6.7-12.7-3 Collar, 6.7-12.7-3	5	5	
4-25	910103-6616	ﾎﾞﾙﾄ Bolt	3	3	
4-26	309-06972-0	ｸﾗﾝﾌﾟ、6.5-47.5P Clamp, 6.5-47.5P	1	1	
4-27	3T9-10088-0	ｴｱﾎｰｽ Air Hose	1	1	
4-27-1	3T5-10162-0	O ﾘﾝｸﾞ、1.9-9.8 ＊ O-Ring, 1.9-9.8	2	2	
4-28	3T9-10089-2	ﾌｭｴﾙﾎｰｽ Fuel Hose	1	1	70B # 70242～ 90B # 00766～
4-28-1	3T5-10162-0	O ﾘﾝｸﾞ、1.9-9.8 ＊ O-Ring, 1.9-9.8	2	2	
4-28-2	3T5B10143-0	高圧ﾌｭｴﾙﾌｨﾙﾀ ＊ Fuel Filter	1	1	for High Pressure
4-28-3	3T5-06157-0	ﾌﾟﾛﾃｸﾄﾁｭｰﾌﾞ ＊ Protect Tube	2	2	
4-28-4	3T5-10086-0	ｸﾗﾝﾌﾟ、21/32 ＊ Clamp, 21/32	2	2	
4-29	3T5-10169-0	ﾆｯﾌﾟﾙﾎｰﾙﾃﾞｨﾝｸﾞﾌﾟﾚｰﾄ Nipple Holding Plate	2	2	
4-30	910103-6616	ﾎﾞﾙﾄ Bolt	2	2	
4-31	3T5-10145-0	ﾌｭｴﾙﾌｨﾙﾀﾗﾊﾞｰﾏｳﾝﾄ Fuel Filter Rubber Mount	1	1	
4-32	3Y9-10144-0	ﾌｭｴﾙﾌｨﾙﾀﾊﾞﾝﾄﾞ Fuel Filter Band	1	1	70B # 70242～ 90B # 00766～
4-33	3T5-84398-0	ﾘｰﾄﾞﾜｲﾔﾊﾞﾝﾄﾞ、104 Lead Wire Band, 104	2	2	
4-34	98AB-5-0650	ﾌｭｴﾙﾊﾟｲﾌﾟ Fuel Pipe	1	1	
4-35	98AB-5-0230	ｴｱﾊﾟｲﾌﾟ Air Pipe	1	1	
4-36	338-02215-0	ｸﾘｯﾌﾟ、φ10 Clip, φ10	4	4	

FFP アッシ
Fig.5 FFP ASS'Y

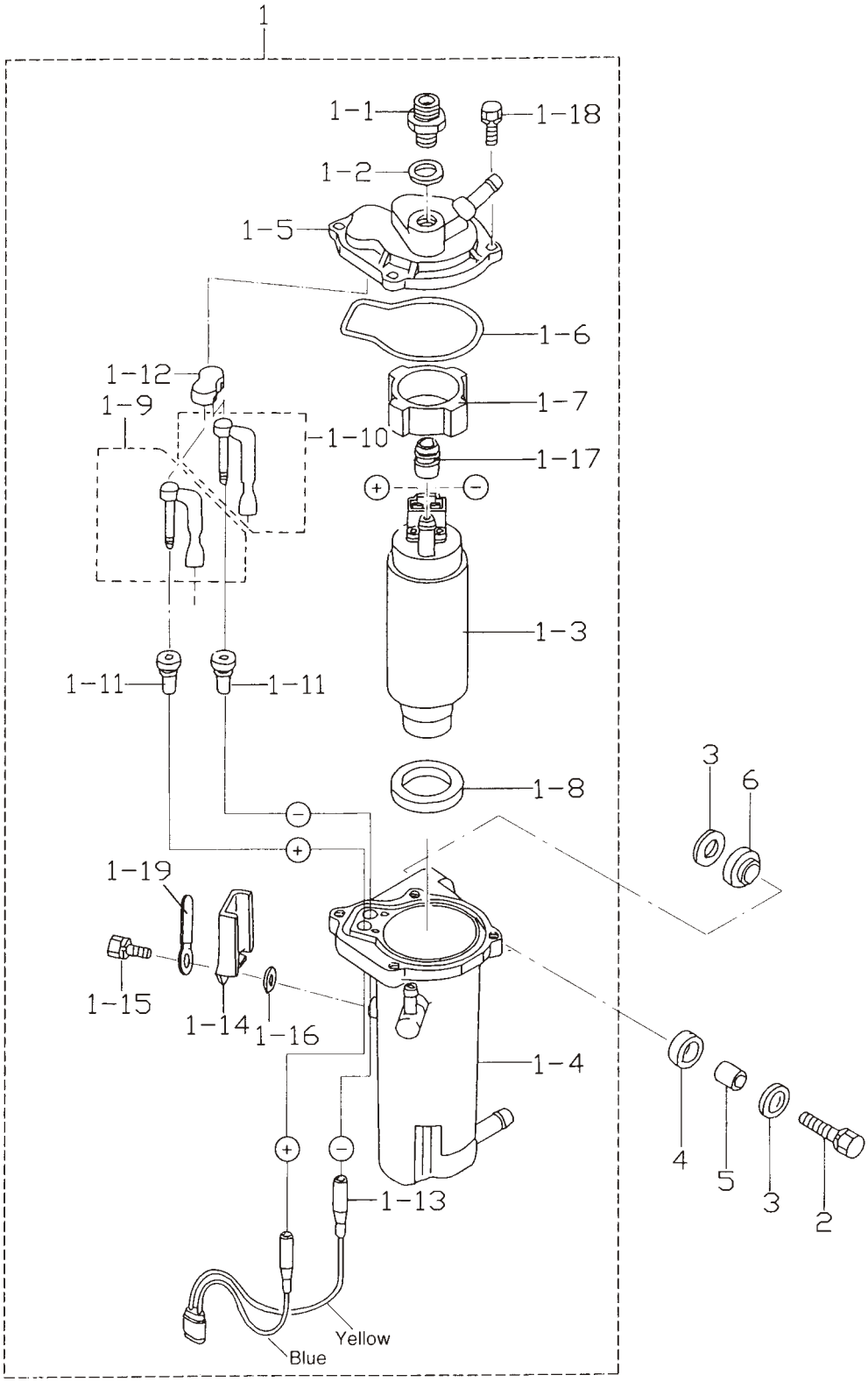

見出番号 Ref. No.	部品番号 Part No.	部　品　名 Description	個数 Q'ty D 90 B	個数 Q'ty D 70 B	備　考 Remarks
5-1	3T5-04310-0	FFP (ﾌｭｴﾙﾌｨｰﾄﾞﾎﾟﾝﾌﾟ) ｱｯｼ FFP (Fuel Feed Pump) Ass'y	1	1	
5-1-1	3T5-04308-0	ﾎｰｽｼﾞｮｲﾝﾄｱﾀﾞﾌﾟﾀ * Hose Joint Adapter	1	1	
5-1-2	3T5-04309-0	ﾒﾀﾙﾜｯｼｬ、10.2-17-2 * Metal Washer, 10.2-17-2	1	1	
5-1-3	3T5-04302-0	ﾌｭｴﾙﾌｨｰﾄﾞﾎﾟﾝﾌﾟ * Fuel Feed Pump	1	1	
5-1-4	3T5-04311-0	FFP ｹｰｽ * FFP Case	1	1	
5-1-5	3T5-04312-0	FFP ｹｰｽ (ｱｯﾊﾟ) * FFP Case (Upper)	1	1	
5-1-6	3T5-04116-0	O ﾘﾝｸﾞ * O-Ring,	1	1	
5-1-7	3T5-04313-0	FFP ｸﾞﾛﾒｯﾄ (ｱｯﾊﾟ) * FFP Grommet (Upper)	1	1	
5-1-8	3T5-04314-0	FFP ｸﾞﾛﾒｯﾄ (ﾛﾜ) * FFP Grommet (Lower)	1	1	
5-1-9	3T5-04236-0	ｹｰﾌﾞﾙﾀｰﾐﾅﾙ (＋) * Cable Terminal (Positive)	1	1	
5-1-10	3T5-04237-0	ｹｰﾌﾞﾙﾀｰﾐﾅﾙ (－) * Cable Terminal (Negative)	1	1	
5-1-11	3T5-04317-0	ｹｰﾌﾞﾙﾀｰﾐﾅﾙｸﾞﾛﾒｯﾄ * Cable Terminal Grommet	2	2	
5-1-12	3T5-04318-0	ｹｰﾌﾞﾙﾀｰﾐﾅﾙｸﾞﾛﾒｯﾄ (ｱｯﾊﾟ) * Cable Terminal Grommet (Upper)	1	1	
5-1-13	3T5-04238-0	FFP ｺｰﾄﾞ * FFP Cord	1	1	
5-1-14	3T5-04239-0	FFP ｺｰﾄﾞｶﾊﾞｰ * FFP Cord Cover	1	1	
5-1-15	910103-5512	ﾎﾞﾙﾄ * Bolt	1	1	
5-1-16	940103-0500	ﾜｯｼｬ * Washer	1	1	
5-1-17	3T5-04319-0	ﾊﾟｲﾌﾟｸﾞﾛﾒｯﾄ * Pipe Grommet	1	1	
5-1-18	910103-6518	ﾎﾞﾙﾄ * Bolt	4	4	
5-1-19	309-06972-0	ｸﾗﾝﾌﾟ、6.5-47.5P * Clamp, 6.5-47.5P	1	1	
5-2	910103-6630	ﾎﾞﾙﾄ Bolt	2	2	
5-3	3R0-66308-0	ﾜｯｼｬ、6-16-1.5 Washer, 6-16-1.5	4	4	or 3C8-66308-0
5-4	3F3-06920-0	ﾗﾊﾞｰﾏｳﾝﾄ、9-12-2 Rubber Mount, 9-12-2	2	2	
5-5	346-67114-0	ｽﾍﾟｰｻ、6.2-9-15.7 Spacer, 6.2-9-15.7	2	2	
5-6	3T5-06920-0	ﾗﾊﾞｰﾏｳﾝﾄ、8.5-18-7 Rubber Mount, 8.5-18-7	2	2	

ベーパセパレータ & フュエルライン
Fig.6 VAPOR SEPARATOR & FUEL LINE

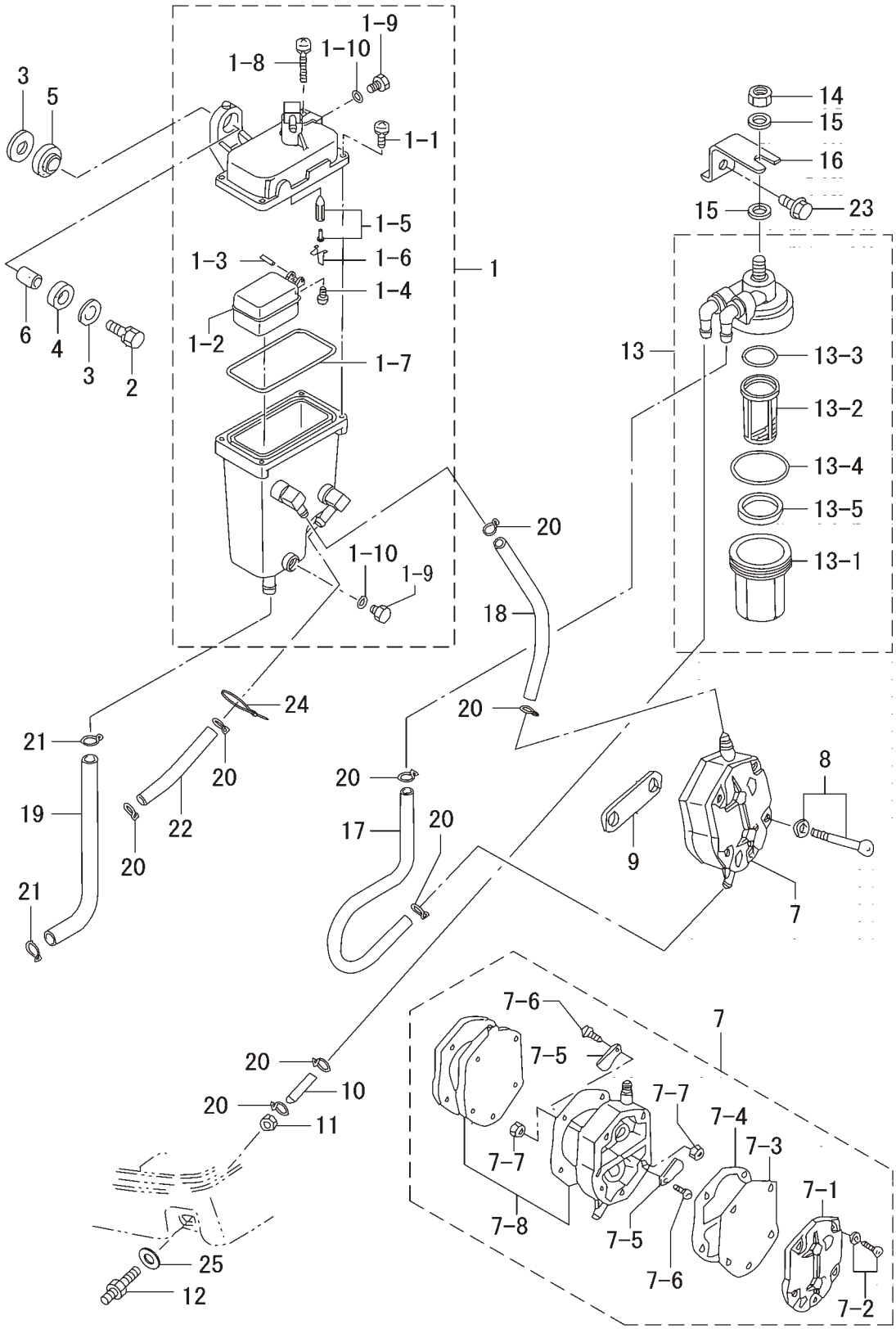

見出番号 Ref. No.	部品番号 Part No.	部　品　名 Description	個数 Q'ty D 90 B	個数 Q'ty D 70 B	備　考 Remarks
6-1	3T5-10150-1	ﾍﾞｰﾊﾟｾﾊﾟﾚｰﾀ Vapor Separator	1	1	
6-1-1	922531-6414	ｽｸﾘｭ ＊ Screw	3	3	
6-1-2	3T5-03230-0	ﾌﾛｰﾄ ＊ Float	1	1	
6-1-3	3F3-03232-0	ﾌﾛｰﾄｱｰﾑﾋﾟﾝ ＊ Float Arm Pin	1	1	
6-1-4	921503-0408	ｽｸﾘｭ ＊ Screw	1	1	
6-1-5	3R3-03239-0	ﾌﾛｰﾄﾊﾞﾙﾌﾞ ＊ Float Valve	1	1	ﾊﾞﾙﾌﾞﾋﾟﾝ付 with Valve Pin
6-1-6	344-03244-0	ｸﾘｯﾌﾟ ＊ Clip	1	1	
6-1-7	3T5-03235-0	O ﾘﾝｸﾞ ＊ O-Ring	1	1	
6-1-8	921503-6430	ｽｸﾘｭ ＊ Screw	1	1	
6-1-9	345-03292-0	ﾄﾞﾚﾝｽｸﾘｭ ＊ Drain Screw	2	2	
6-1-10	336-03293-0	O ﾘﾝｸﾞ ＊ O-Ring	2	2	
6-2	910103-6630	ﾎﾞﾙﾄ Bolt	2	2	
6-3	346-67115-0	ﾜｯｼｬ、6.5-21-1 Washer, 6.5-21-1	4	4	
6-4	346-67113-0	ﾗﾊﾞｰﾏｳﾝﾄ、8.5-14-2.5 Rubber Mount, 8.5-14-2.5	2	2	
6-5	3B7-06920-0	ﾗﾊﾞｰﾏｳﾝﾄ、8.5-14-2.5 Rubber Mount, 8.5-14-2.5	2	2	
6-6	346-67114-0	ｽﾍﾟｰｻ、6.2-9-15.7 Spacer, 6.2-9-15.7	2	2	
6-7	356-04000-1	ﾌｭｴﾙﾎﾟﾝﾌﾟ Fuel Pump	1	1	
6-7-1	334-04004-0	ﾎﾟﾝﾌﾟｶﾊﾞｰ ＊ Pump Cover	1	1	
6-7-2	922512-6528	ｽｸﾘｭ ＊ Screw	3	3	
6-7-3	334-04005-0	ﾎﾟﾝﾌﾟﾀﾞｲｱﾌﾗﾑ ＊ Pump Diaphragm	1	1	
6-7-4	334-04007-0	ﾀﾞｲｱﾌﾗﾑｶﾞｽｹｯﾄ B ＊ Diaphragm Gasket “B”	1	1	
6-7-5	356-04044-0	ﾁｪｯｸﾊﾞﾙﾌﾞ ＊ Check Valve	2	2	
6-7-6	921722-0306	ｽｸﾘｭ ＊ Screw	2	2	
6-7-7	930222-0300	ﾅｯﾄ ＊ Nut	2	2	
6-7-8	356-04030-0	ﾀﾞｲｱﾌﾗﾑｶﾞｽｹｯﾄｾｯﾄ ＊ Diaphragm Gasket Set	1	1	
6-8	910103-6640	ﾎﾞﾙﾄ Bolt	2	2	
6-9	346-04901-1	ﾌｭｴﾙﾎﾟﾝﾌﾟｶﾞｽｹｯﾄ Fuel Pump Gasket	1	1	
6-10	98AB-5-0450	ﾌｭｴﾙﾊﾟｲﾌﾟ E Fuel Pipe “E”	1	1	
6-11	3T9-70253-0	ﾅｯﾄ Nut	1	1	
6-12	3B2-70260-1	ﾌｭｴﾙｺﾈｸﾀ (ｴﾝｼﾞﾝ、ﾒｰﾙ) Fuel Connector (Engine, Male)	1	1	

ベーパセパレータ & フュエルライン

Fig.6 VAPOR SEPARATOR & FUEL LINE

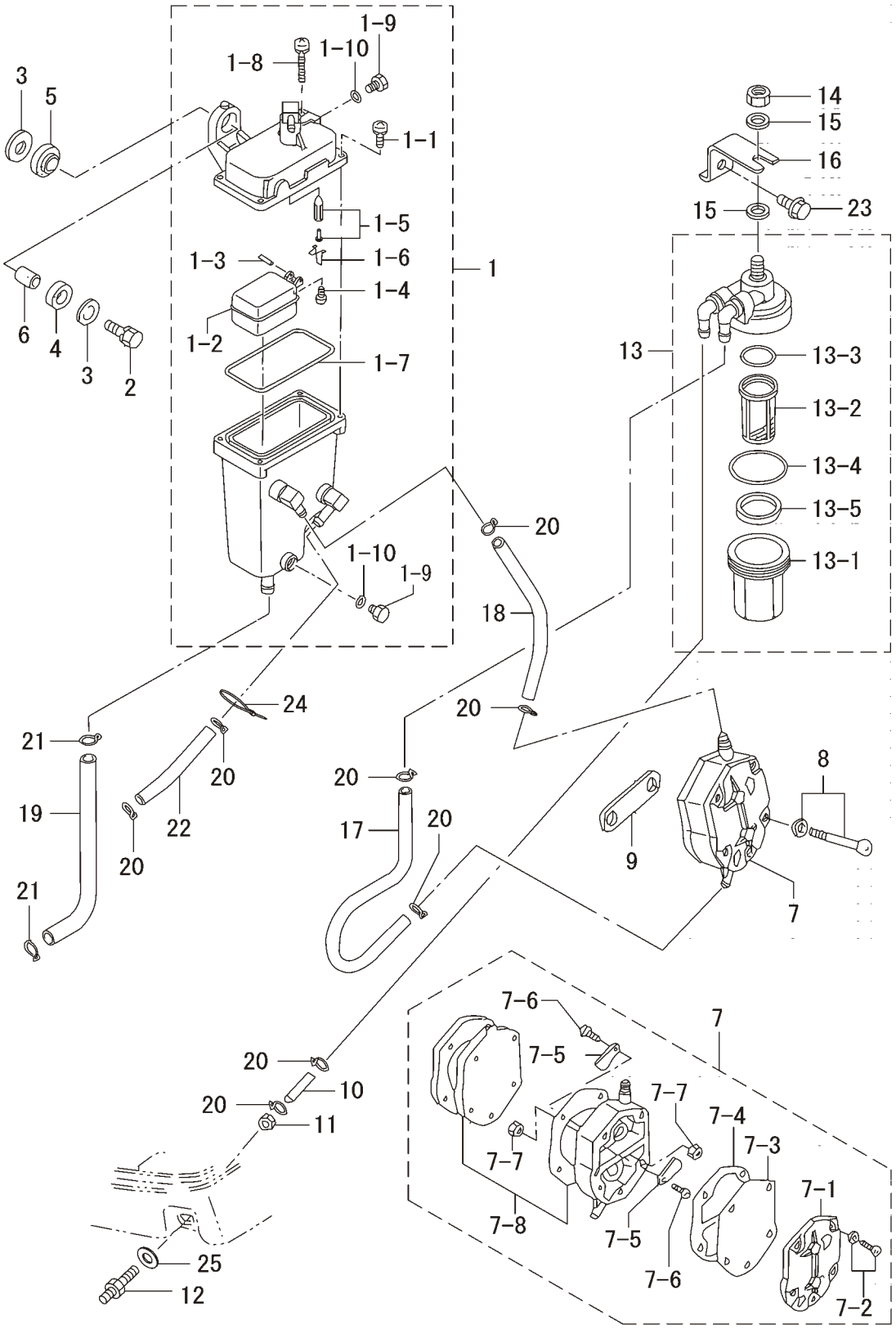

見出番号 Ref. No.	部品番号 Part No.	部　品　名 Description	個数 Q'ty D 90 B	個数 Q'ty D 70 B	備　考 Remarks
6-13	3T5-02230-0	ﾌｭｴﾙﾌｨﾙﾀ Fuel Filter	1	1	
6-13-1	3B7-02237-0	ﾊﾟｯﾌﾟ ＊ Cup	1	1	
6-13-2	3B7-02234-0	ﾌｨﾙﾀ ＊ Filter	1	1	
6-13-3	3B7-02236-0	O ﾘﾝｸﾞ B ＊ O-Ring B	1	1	
6-13-4	3B7-02235-0	O ﾘﾝｸﾞ A ＊ O-Ring A	1	1	
6-13-5	3T5-02229-0	ﾌﾛｰﾄ ＊ Float	1	1	
6-14	930103-0800	ﾅｯﾄ Nut	1	1	or 930113-0800
6-15	940113-0800	ﾜｯｼｬ Washer	2	2	
6-16	3T5-02239-0	ﾌｨﾙﾀﾌﾟﾚｰﾄ Filter Plate	1	1	
6-17	98AB-5-0280	ﾌｭｴﾙﾊﾟｲﾌﾟ A Fuel Pipe “A”	1	1	
6-18	98AB-5-0210	ﾌｭｴﾙﾊﾟｲﾌﾟ B Fuel Pipe “B”	1	1	
6-19	98AB-7-0210	ﾌｭｴﾙﾊﾟｲﾌﾟ C Fuel Pipe “C”	1	1	
6-20	338-02215-0	ｸﾘｯﾌﾟ、φ10 Clip, φ10	8	8	
6-21	3C7-02215-0	ｸﾘｯﾌﾟ、φ12 Clip, φ12	2	2	
6-22	98AB-5-0075	ﾌｭｴﾙﾊﾟｲﾌﾟ D Fuel Pipe “D”	1	1	
6-23	910103-6614	ﾎﾞﾙﾄ Bolt	1	1	
6-24	3T5-84398-0	ﾘｰﾄﾞﾜｲﾔﾊﾞﾝﾄﾞ、104 Lead Wire Band, 104	1	1	
6-25	3T9-70264-0	ﾌﾞｯｼﾝｸﾞ、10.2-12-2.9 Bushing, 10.2-12-2.9	1	1	

スロットル
Fig.7 THROTTLE

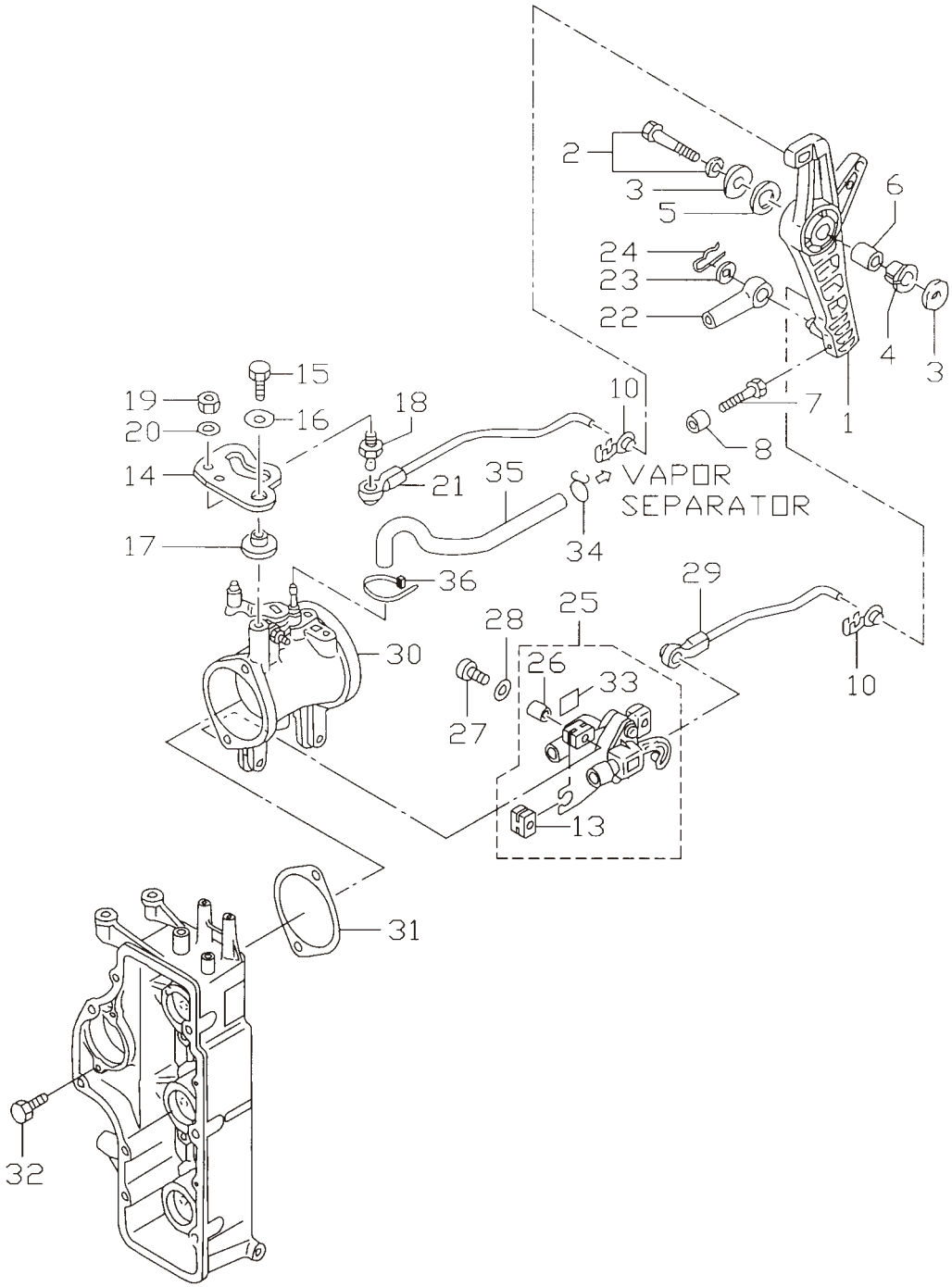

見出番号 Ref. No.	部品番号 Part No.	部　品　名 Description	個数 Q'ty D 90 B	個数 Q'ty D 70 B	備　考 Remarks
7-1	3B7B63711-3	ｱﾄﾞﾊﾞﾝｻｱｰﾑ Advancer Arm	1	1	
7-2	910103-6835	ﾎﾞﾙﾄ Bolt	1	1	
7-3	3B7-63730-0	ﾜｯｼｬ、8.5-24-1.5 Washer, 8.5-24-1.5	2	2	
7-4	3B7-63713-0	ﾌﾞｯｼﾝｸﾞ、12-14-15.5 Bushing, 12-14-15.5	1	1	
7-5	3B7-63731-0	ﾜｯｼｬ、12.5-24-1 Washer, 12.5-24-1	1	1	
7-6	3B7-63732-0	ｶﾗｰ、8.4-12-17 Collar, 8.4-12-17	1	1	
7-7	910103-0618	ﾎﾞﾙﾄ Bolt	1	1	
7-8	353-76079-0	ｶﾗｰ、6.2-9-9.3 Collar, 6.2-9-9.3	1	1	
7-10	3B7-63733-0	ﾛｯﾄﾞｽﾅｯﾌﾟ、5-3 Rod Snap, 5-3	2	2	
7-13	3T5-10107-0	ﾗﾊﾞｰﾏｳﾝﾄ Rubber Mount	3	3	
7-14	3T9-63718-0	ｽﾛｯﾄﾙｶﾑ Throttle Cam	1	1	
7-15	910103-6618	ﾎﾞﾙﾄ Bolt	1	1	
7-16	346-67115-0	ﾜｯｼｬ、6.5-21-1 Washer, 6.5-21-1	1	1	
7-17	3T5-63721-0	ﾌﾞｯｼﾝｸﾞ、6-24-7 Bushing, 6-24-7	1	1	
7-18	346-05228-1	ﾎﾞｰﾙｼﾞｮｲﾝﾄ B Ball Joint “B”	1	1	
7-19	930203-0600	ﾅｯﾄ Nut	1	1	
7-20	940103-0600	ﾜｯｼｬ Washer	1	1	or 940113-0600
7-21	3T9-63702-1	ｽﾛｯﾄﾙﾘﾝｸﾛｯﾄﾞ Throttle Link Rod	1	1	Old Part No. 3T9-63716-0
7-22	3B7-83715-1	ｹｰﾌﾞﾙｼﾞｮｲﾝﾄ Cable Joint	1	1	
7-23	3AA-83719-0	ﾜｯｼｬ、8.5-18-1.6 Washer, 8.5-18-1.6	1	1	or 353-83719-0
7-24	951603-0800	ｽﾅｯﾌﾟﾋﾟﾝ、d=8 Snap Pin, d=8	1	1	
7-25	3T5-10110-0	TPS TPS	1	1	
7-26	3T5-10128-0	ｶﾗｰ、4.2-6-10.5 Collar, 4.2-6-10.5	3	3	
7-27	921503-6420	ｽｸﾘｭ Screw	3	3	
7-28	3T5-10129-0	ﾜｯｼｬ、4.2-12.5-0.8 Washer, 4.2-12.5-0.8	3	3	
7-29	3T9-10109-1	TPS ﾘﾝｸﾛｯﾄﾞ TPS Link Rod	1	1	
7-30	3T9-10100-0	ｽﾛｯﾄﾙﾎﾞﾃﾞｨ Throttle Body	1	-	
	3T7-10100-0	ｽﾛｯﾄﾙﾎﾞﾃﾞｨ Throttle Body	-	1	
7-31	3T5-10104-0	ｽﾛｯﾄﾙﾎﾞﾃﾞｨｶﾞｽｹｯﾄ Throttle Body Gasket	1	1	
7-32	3T5-02241-0	ﾎﾞﾙﾄ、6-25 ﾌﾟﾚｺｰﾄ Bolt, 6-25 Pre-coated	2	2	

スロットル
Fig.7 THROTTLE

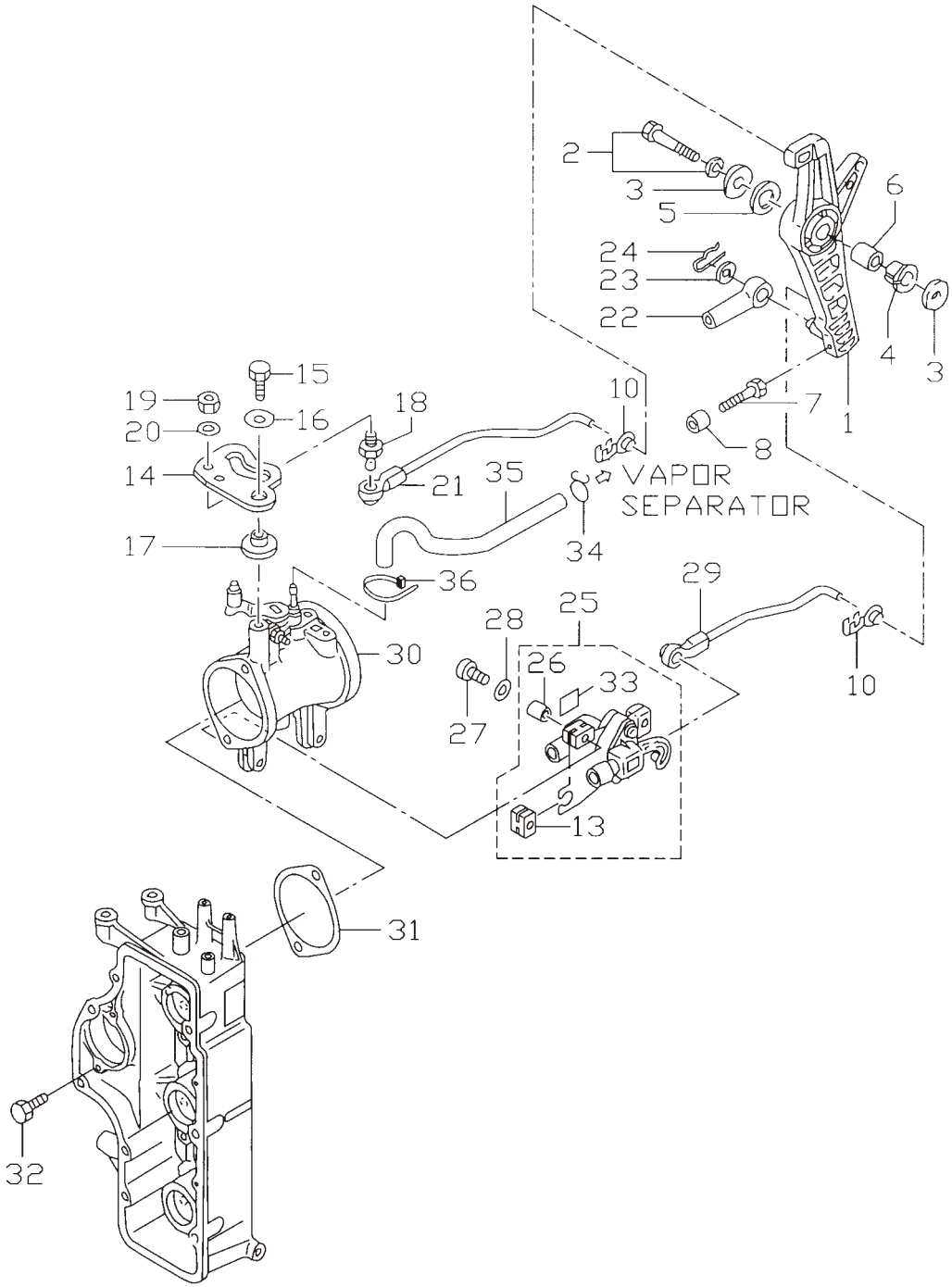

見出番号 Ref. No.	部品番号 Part No.	部　品　名 Description	個数 Q'ty D 90 B	個数 Q'ty D 70 B	備　考 Remarks
7-33	3T5-72195-0	TPS ﾃﾞｶﾙ TPS Decal	1	1	
7-34	338-01133-0	ｸﾘｯﾌﾟ、φ7 Clip, φ7	1	1	
7-35	98AB-3-0360	ﾌｭｴﾙﾊﾟｲﾌﾟ Fuel Pipe	1	1	
7-36	3T5-84398-0	ﾘｰﾄﾞﾜｲﾔﾊﾞﾝﾄﾞ、104 Lead Wire Band, 104	1	1	

マグネト
Fig.8 MAGNETO

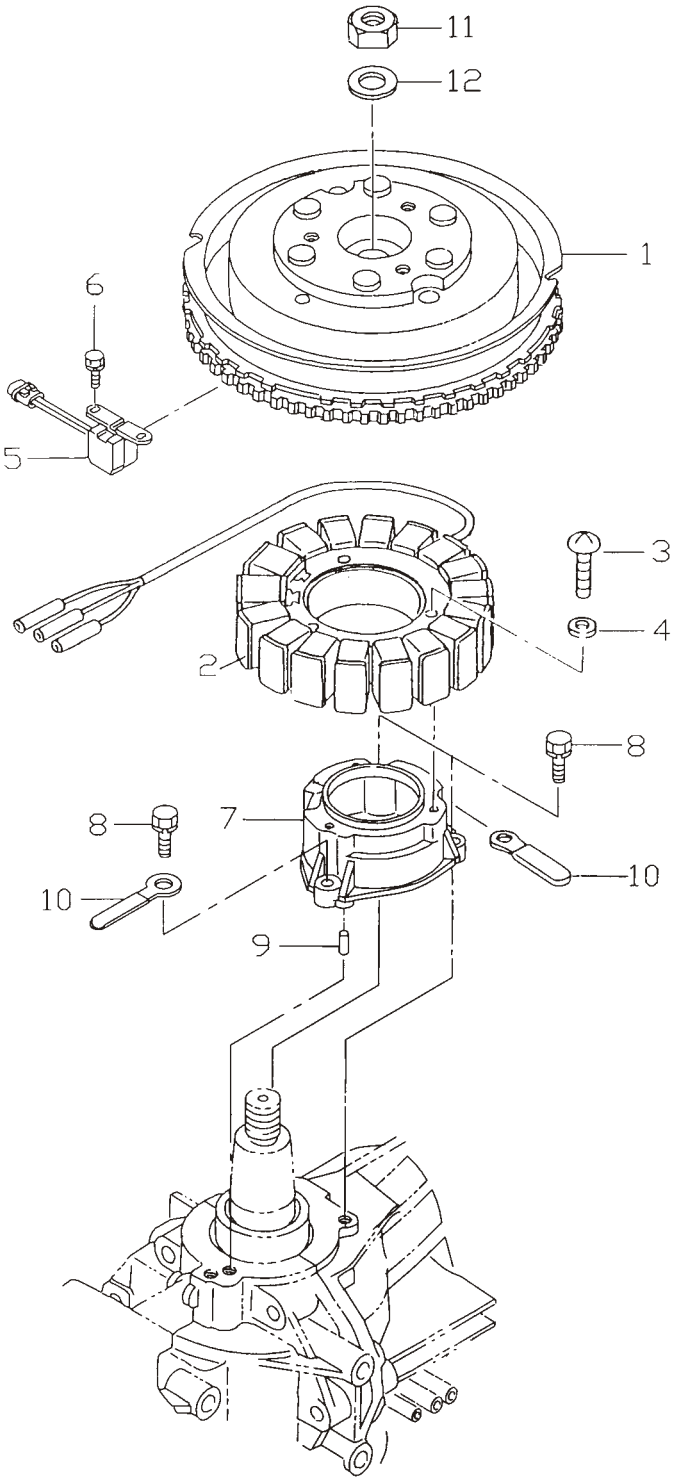

見出番号 Ref. No.	部品番号 Part No.	部　品　名 Description	個数 Q'ty D 90 B	個数 Q'ty D 70 B	備　考 Remarks
8-1	3T9-06101-0	ﾌﾗｲﾎｲﾙ Flywheel	1	1	F4T602-71
8-2	3Y9-06123-0	ｵﾙﾀﾈｰﾀ Alternator	1	1	70B # 70242～ 90B # 00766～
8-3	921503-0635	ｽｸﾘｭ Screw	3	3	
8-4	941303-0600	ｽﾌﾟﾘﾝｸﾞﾜｯｼｬ Spring Washer	3	3	
8-5	3T5-06145-0	ﾋﾟｯｸｱｯﾌﾟｺｲﾙ Pick-UP Coil	1	1	ｸﾗﾝｸﾎﾟｼﾞｼｮﾝｾﾝｻ Crank Position Sensor
8-6	910103-6512	ﾎﾞﾙﾄ Bolt	2	2	
8-7	3T5-06008-1	ｺｲﾙﾌﾞﾗｹｯﾄ Coil Bracket	1	1	70B # 70242～ 90B # 00766～
8-8	910103-7625	ﾎﾞﾙﾄ Bolt	3	3	
8-9	334-65012-0	ﾀﾞｳｴﾙﾋﾟﾝ、4-10 Dowel Pin, 4-10	2	2	
8-10	309-06972-0	ｸﾗﾝﾌﾟ、6.5-47.5P Clamp, 6.5-47.5P	2	2	1 for 70A2/90A2
8-11	353-00132-0	ﾅｯﾄ、18-P1.5 Nut, 18-P1.5	1	1	
8-12	353-00133-0	ﾜｯｼｬ、19-34-3 Washer, 19-34-3	1	1	

エレクトリックパーツ (ECU & ダイヤグラム)

Fig.9 ELECTRIC PARTS (ECU & DIAGRAM)

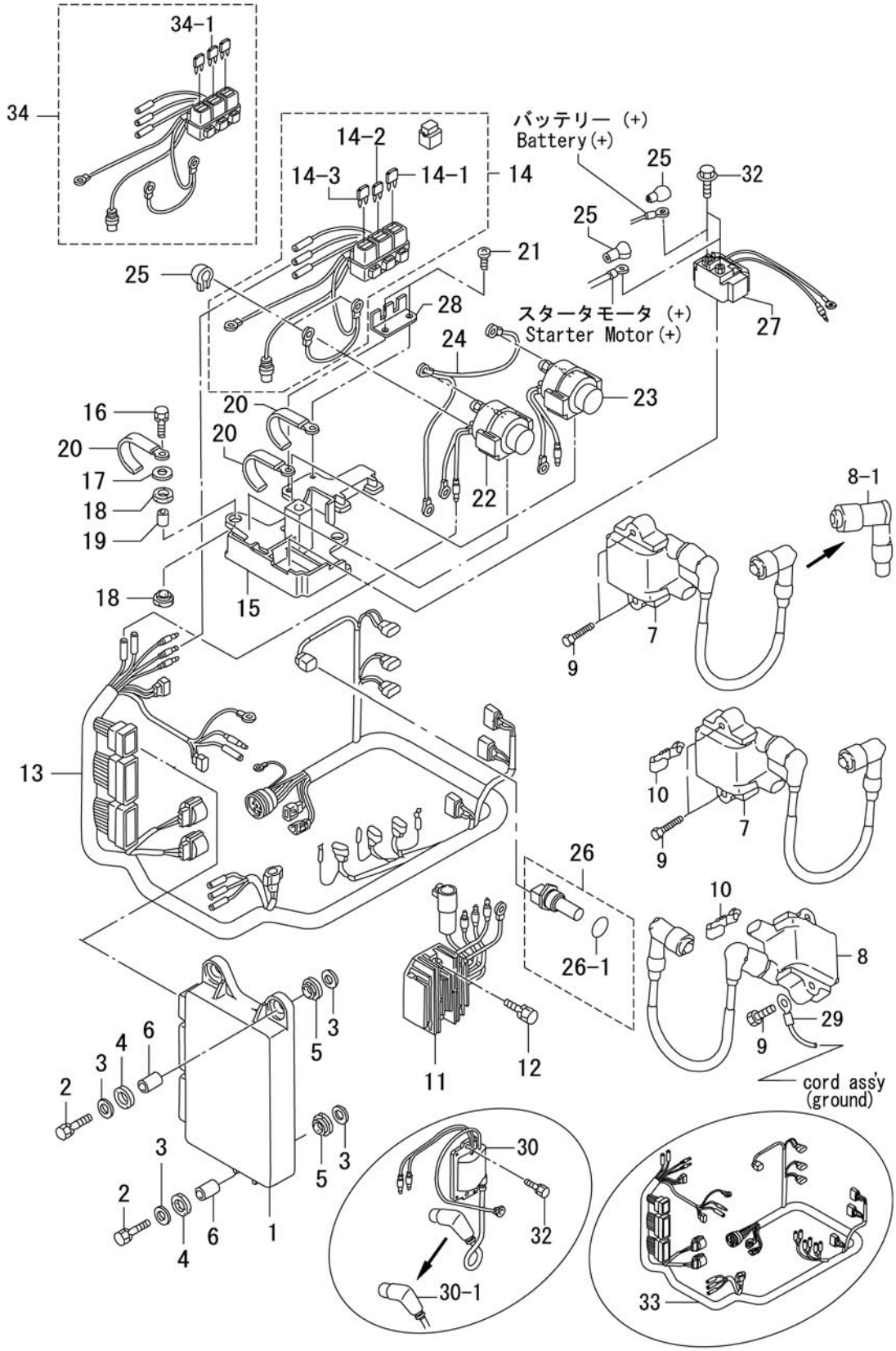

見出番号 Ref. No.	部品番号 Part No.	部　品　名 Description	個数 Q'ty D 90 B	個数 Q'ty D 70 B	備　考 Remarks
9-1	3Y9-06401-0	ECU 90 ECU 90	1	-	Decal 3Y902AB 90B # 00766～
	3Y7-06401-0	ECU 70 ECU 70	-	1	Decal 3Y702AB 70B # 70242～
9-2	910103-6630	ﾎﾞﾙﾄ Bolt	3	3	
9-3	346-67115-0	ﾜｯｼｬ、6.5-21-1 Washer, 6.5-21-1	6	6	
9-4	346-67113-0	ﾗﾊﾞｰﾏｳﾝﾄ、8.5-14-2.5 Rubber Mount, 8.5-14-2.5	3	3	
9-5	3B7-06920-0	ﾗﾊﾞｰﾏｳﾝﾄ、8.5-14-2.5 Rubber Mount, 8.5-14-2.5	3	3	
9-6	3T5-67114-0	ｽﾍﾟｰｻ、6.2-9-16.6 Spacer, 6.2-9-16.6	3	3	
9-7	3Y9-06469-0	ｲｸﾞﾆｯｼｮﾝｺｲﾙ、# 1& # 2 Ignition Coil, # 1& # 2	2	2	70B # 70242～ 90B # 00766～
9-8	3Y9-06470-0	ｲｸﾞﾆｯｼｮﾝｺｲﾙ、# 3 Ignition Coil, # 3	1	1	70B # 70242～ 90B # 00766～
9-8-1	3H6-06999-0	ﾌﾟﾗｸﾞｷｬｯﾌﾟ（ﾚｼﾞｽﾀﾝｽ） ＊ Plug Cap (with Resistance)	3	3	70B # 70242～ 90B # 00766～
9-9	910103-7635	ﾎﾞﾙﾄ Bolt	6	6	70B # 70242～ 90B # 00766～
9-10	3T4-06972-0	ｸﾗﾝﾌﾟ、6.5-87P Clamp, 6.5-87P	2	2	
9-11	3Z5-76060-0	ﾚｸﾁﾌｧｲﾔ Rectifier	1	1	
9-12	910103-7625	ﾎﾞﾙﾄ Bolt	2	2	
9-13	3Y9-76110-0	ｺｰﾄﾞｱｯｼ A Cord Ass'y "A"	1	1	70B # 70242～ 90B # 00766～
9-14	3Y9-76062-0	ﾋｭｰｽﾞﾎﾙﾀﾞ Fuse Holder	1	1	70B # 70242～ 90B # 00766～
9-14-1	3T5-76246-0	ﾋｭｰｽﾞ、15A ＊ Fuse, 15A	1	1	
9-14-2	3T5-76248-0	ﾋｭｰｽﾞ、25A ＊ Fuse, 25A	1	1	70B # 70242～ 90B # 00766～
9-14-3	3T5-76249-0	ﾋｭｰｽﾞ、30A ＊ Fuse, 30A	1	1	
9-15	3T5-72585-0	ｿﾚﾉｲﾄﾞｽｲｯﾁﾌﾞﾗｹｯﾄ Solenoid Switch Bracket	1	1	
9-16	910103-6625	ﾎﾞﾙﾄ Bolt	3	3	
9-17	3R0-66308-0	ﾜｯｼｬ、6.5-16-1.5 Washer, 6.5-16-1.5	3	3	
9-18	3F3-06920-0	ﾗﾊﾞｰﾏｳﾝﾄ、8.5-12-2 Rubber Mount, 8.5-12-2	6	6	
9-19	3T5-76079-0	ｽﾍﾟｰｻ、6.2-9-10.7 Spacer, 6.2-9-10.7	3	3	
9-20	3T4-06972-0	ｸﾗﾝﾌﾟ、6.5-87P Clamp, 6.5-87P	3	3	
9-21	3T5-06437-0	ﾀｯﾋﾟﾝｸﾞｽｸﾘｭ、6-16 Tapping Screw, 6-16	2	2	
9-22	3C8-72580-0	PTT ｿﾚﾉｲﾄﾞｽｲｯﾁ A PTT Solenoid Switch "A"	1	1	UP
9-23	3C8-72581-0	PTT ｿﾚﾉｲﾄﾞｽｲｯﾁ B PTT Solenoid Switch "B"	1	1	DN
9-24	3T5-76142-0	ｱｰｽﾜｲﾔ Ground Cable	1	1	
9-25	3A3-76145-0	ﾀｰﾐﾅﾙｷｬｯﾌﾟ Terminal Cap	2	2	

エレクトリックパーツ (ECU & ダイヤグラム)

Fig.9 ELECTRIC PARTS (ECU & DIAGRAM)

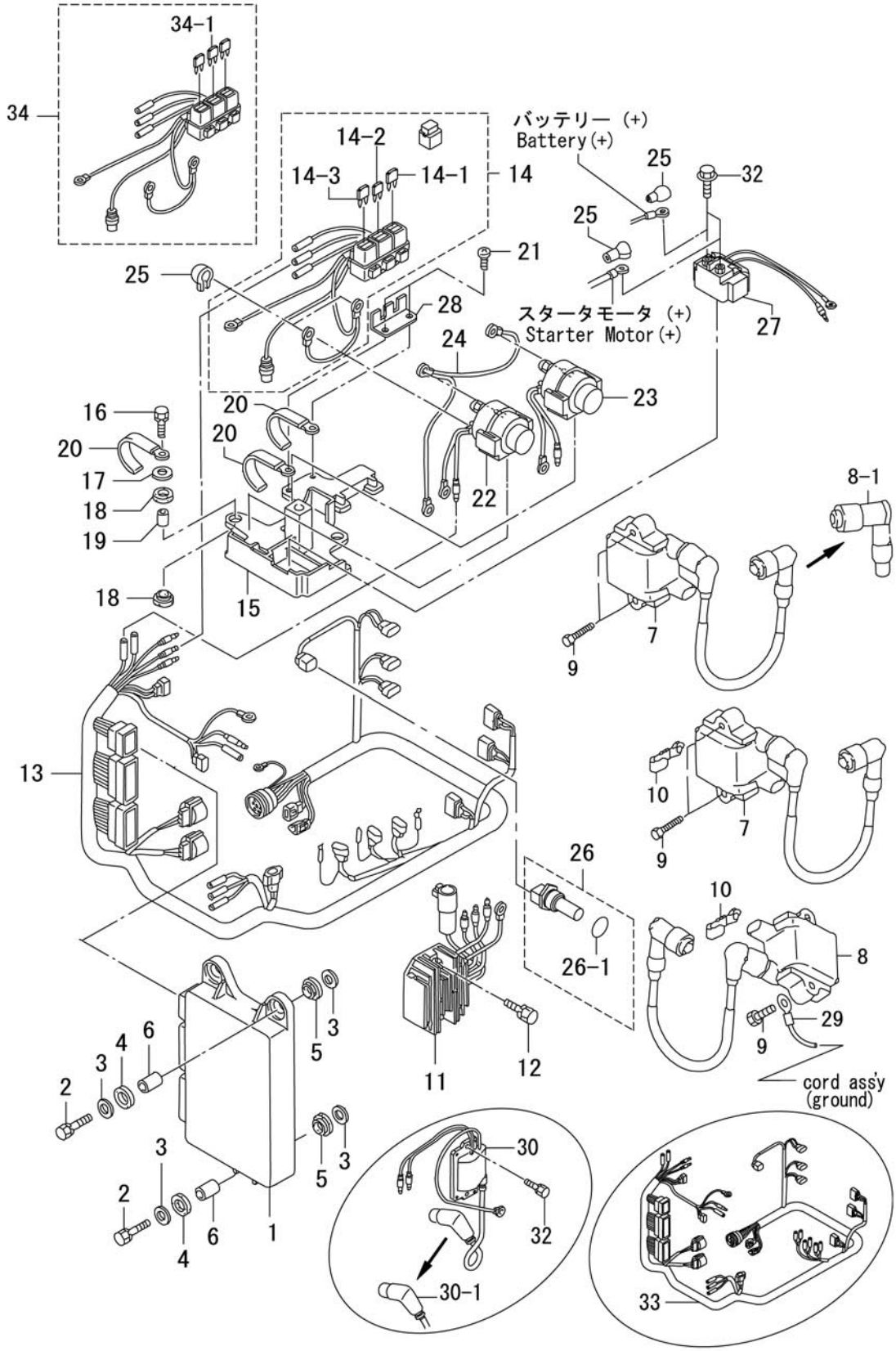

見出番号 Ref. No.	部品番号 Part No.	部　品　名 Description	個数 Q'ty D 90 B	個数 Q'ty D 70 B	備　考 Remarks
9-26	3Y9-72514-0	ｳｫｰﾀﾃﾝﾌﾟｾﾝｻ Water Temperature Sensor	1	1	70B # 70242～ 90B # 00766～
9-26-1	3G9-66136-0	O ﾘﾝｸﾞ、2-10 ＊ O-Ring, 2-10	1	1	70B # 70242～ 90B # 00766～
9-27	3H8-76040-0	ｽﾀｰﾀｿﾚﾉｲﾄﾞ Starter Solenoid	1	1	
9-28	3T9-76064-0	ﾋｭｰｽﾞﾎﾙﾀﾞﾌﾞﾗｹｯﾄ Fuse Holder Bracket	1	1	
9-29	3Y9-76142-0	ｱｰｽﾜｲﾔ Ground Cable	1	1	# 043452XC～ L=400
9-30	3T5-06173-1	ｲｸﾞﾆｯｼｮﾝｺｲﾙ Ignition Coil	(3)	(3)	～70A2 # 70241 ～90A2 # 00765
9-30-1	3T5-06921-0	ﾌﾟﾗｸﾞｷｬｯﾌﾟ（ﾚｼﾞｽﾀﾝｽ） ＊ Plug Cap (with Resistance)	(3)	(3)	～70A2 # 70241 ～90A2 # 00765
9-32	910103-6625	ﾎﾞﾙﾄ Bolt	(6)	(6)	～70A2 # 70241 ～90A2 # 00765
9-33	3T7-76110-0	ｺｰﾄﾞｱｯｼ A Cord Ass'y "A"	(1)	(1)	70A2 # 70052～# 70241 90A2 # 00516～# 00765
9-34	3T7-76062-0	ﾋｭｰｽﾞﾎﾙﾀﾞ Fuse Holder	(1)	(1)	70A2 # 70052～# 70241 90A2 # 00516～# 00765
9-34-1	3T5-76247-0	ﾋｭｰｽﾞ、20A ＊ Fuse, 20A	(1)	(1)	70A2 # 70052～# 70241 90A2 # 00516～# 00765

エレクトリックパーツ（スタータモータ）
Fig.10 ELECTRIC PARTS (STARTER MOTOR)

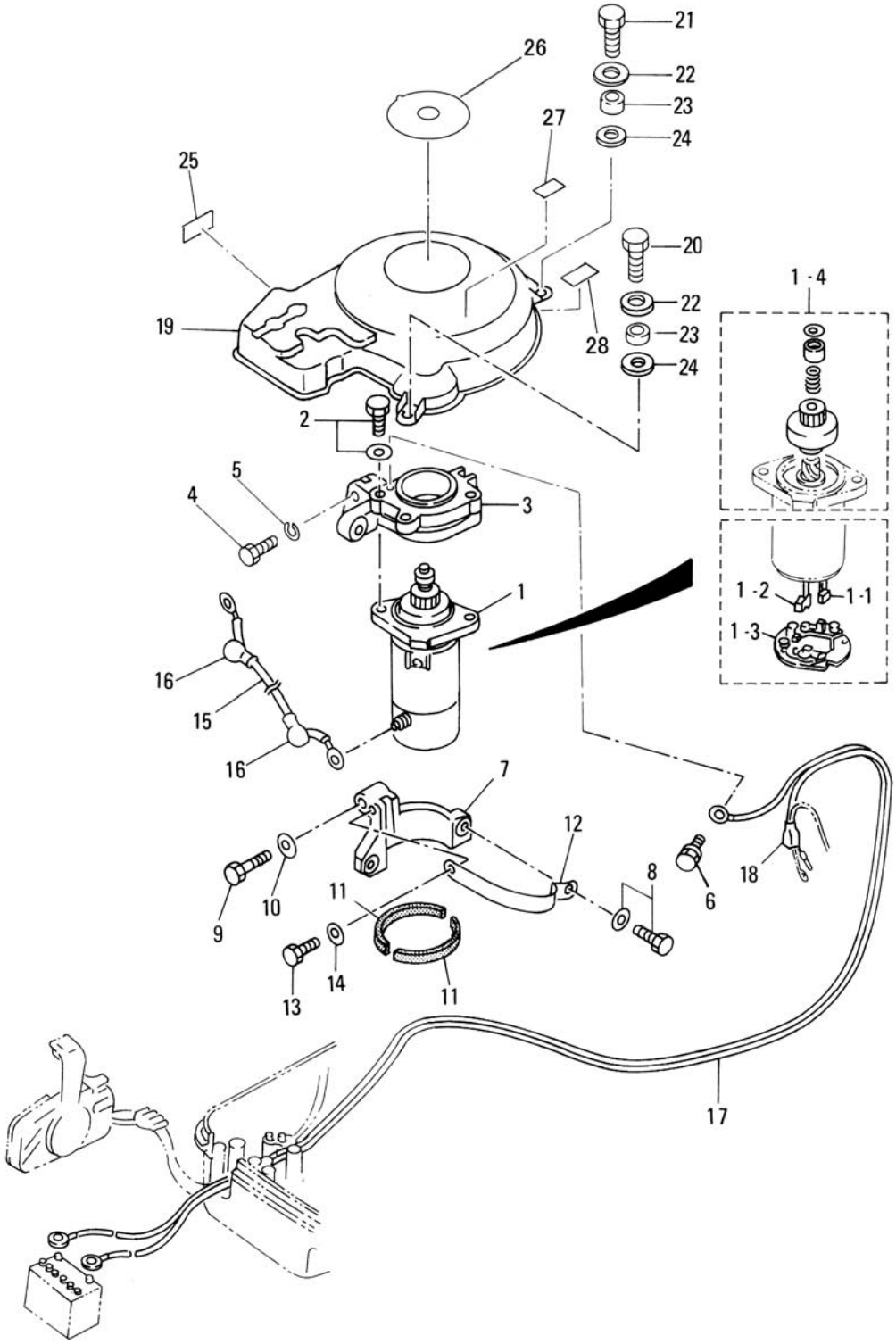

見出番号 Ref. No.	部品番号 Part No.	部　品　名 Description	個数 Q'ty D 90 B	個数 Q'ty D 70 B	備　考 Remarks
10-1	353-76010-4	ｽﾀｰﾀﾓｰﾀ Starter Motor	1	1	
10-1-1	353-76012-3	ｶｰﾎﾞﾝﾌﾞﾗｼ（＋） ＊ Positive Brush（＋）	2	2	
10-1-2	353-76013-3	ｶｰﾎﾞﾝﾌﾞﾗｼ（－） ＊ Negative Brush（－）	1	1	
10-1-3	353-76017-1	ﾌﾞﾗｼｽﾌﾟﾘﾝｸﾞ ＊ Brush Spring	3	3	
10-1-4	353-76015-1	ﾋﾟﾆｵﾝｱｯｼ ＊ Pinion Ass'y	1	1	
10-2	910103-6835	ﾎﾞﾙﾄ Bolt	2	2	
10-3	3T9B05101-0	ｽﾀｰﾀﾓｰﾀﾌﾞﾗｹｯﾄ（ｱｯﾊﾟ） Starter Motor Bracket (Upper)	1	1	
10-4	916114-0845	ﾎﾞﾙﾄ Bolt	2	2	
10-5	941322-0800	ｽﾌﾟﾘﾝｸﾞﾜｯｼｬ Spring Washer	2	2	
10-6	910103-7614	ﾎﾞﾙﾄ Bolt	1	1	
10-7	353B76006-2	ｽﾀｰﾀﾓｰﾀﾌﾞﾗｹｯﾄ Starter Motor Bracket	1	1	
10-8	910113-5840	ﾎﾞﾙﾄ Bolt	1	1	
10-9	916114-0845	ﾎﾞﾙﾄ Bolt	1	1	
10-10	941322-0800	ｽﾌﾟﾘﾝｸﾞﾜｯｼｬ Spring Washer	1	1	
10-11	353-76007-1	ｽﾀｰﾀﾓｰﾀﾀﾞﾝﾊﾟ Starter Motor Damper	2	2	
10-12	3T9B76009-0	ｽﾀｰﾀﾓｰﾀﾊﾞﾝﾄﾞ Starter Motor Band	1	1	
10-13	910103-0820	ﾎﾞﾙﾄ Bolt	1	1	
10-14	940103-0800	ﾜｯｼｬ Washer	1	1	or 940113-0800
10-15	3R3-76141-0	ｽﾀｰﾀｺｰﾄﾞ Starter Cord	1	1	L=270
10-16	3A3-76145-0	ﾀｰﾐﾅﾙｷｬｯﾌﾟ Terminal Cap	2	2	
10-17	3B7-76120-0	ﾊﾞｯﾃﾘｺｰﾄﾞ Battery Cable	1	1	L=3000
10-18	3B7-76145-0	ﾀｰﾐﾅﾙｷｬｯﾌﾟ Terminal Cap	1	1	
10-19	3T9-06301-0	ﾘﾝｸﾞｷﾞﾔｶﾊﾞｰ Ring Gear Cover	1	1	
10-20	910113-0625	ﾎﾞﾙﾄ Bolt	2	2	
10-21	910113-0616	ﾎﾞﾙﾄ Bolt	2	2	
10-22	3R0-66308-0	ﾜｯｼｬ、6-16-1.5 Washer, 6-16-1.5	4	4	
10-23	353-76079-0	ｶﾗｰ、6.2-9-9.3 Collar, 6.2-9-9.3	4	4	
10-24	3B7-06305-0	ﾗﾊﾞｰﾏｳﾝﾄ、9-16-4.3 Rubber Mount, 9-16-4.3	4	4	
10-25	3Y9-72194-0	ﾋｭｰｽﾞﾃﾞｶﾙ Fuse Decal	1	1	70B # 70242～ 90B # 00766～
10-26	3R0-72181-0	ｺｰｼｮﾝﾃﾞｶﾙ（B） Caution Decal “B”	1	1	

エレクトリックパーツ（スタータモータ）
Fig.10 ELECTRIC PARTS (STARTER MOTOR)

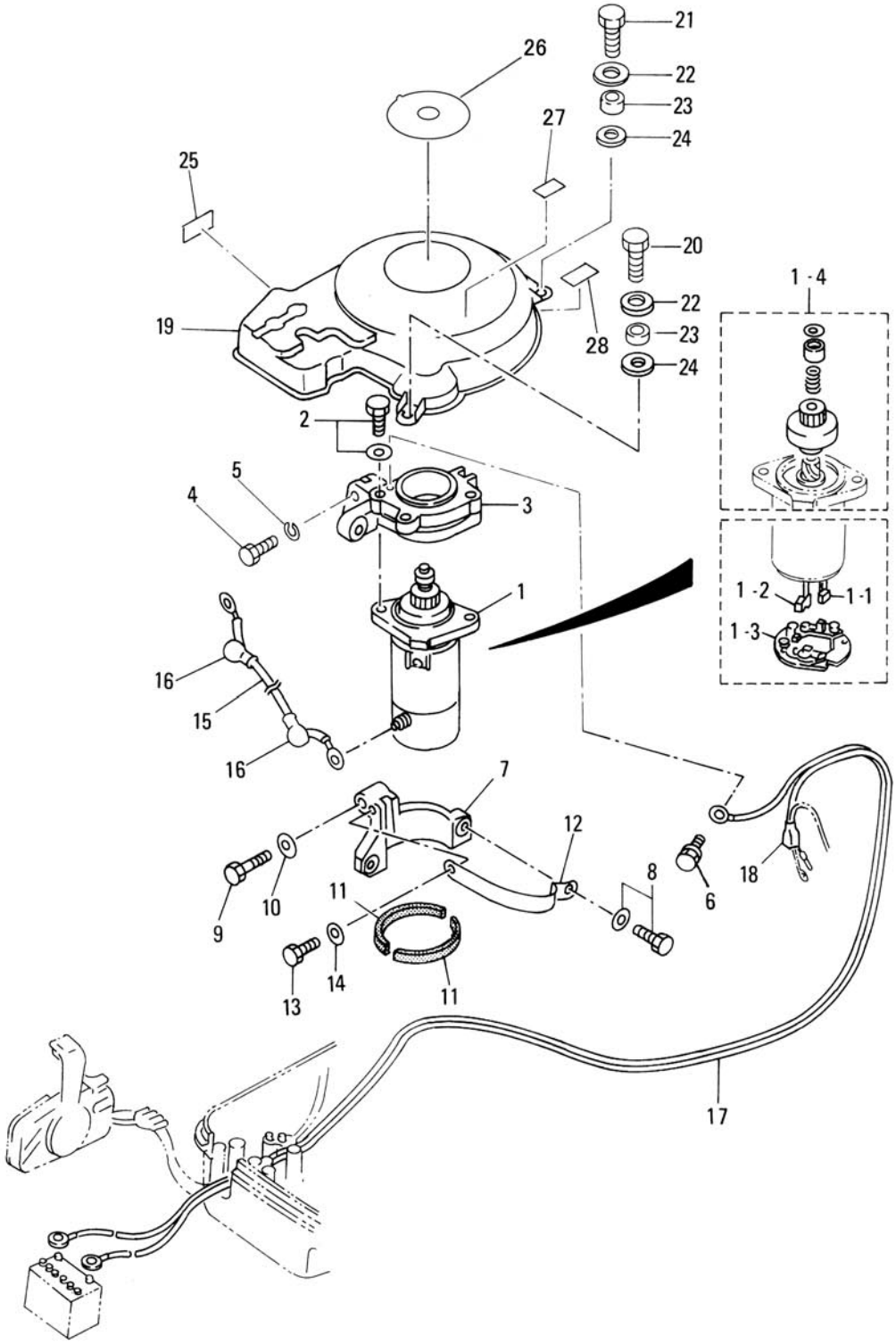

見出番号 Ref. No.	部品番号 Part No.	部　品　名 Description	個数 Q'ty D 90 B	個数 Q'ty D 70 B	備　考 Remarks
10-27	3T5-72186-0	ﾌﾟﾚｯｼｬﾃﾞｶﾙ Pressure Decal	1	1	
10-28	3Y7-72026-0	ｽﾊﾟｰｸﾌﾟﾗｸﾞﾃﾞｶﾙ Spark Plug Decal	1	1	# 033166XD～

エアコンプレッサ
Fig.11 AIR COMPRESSOR

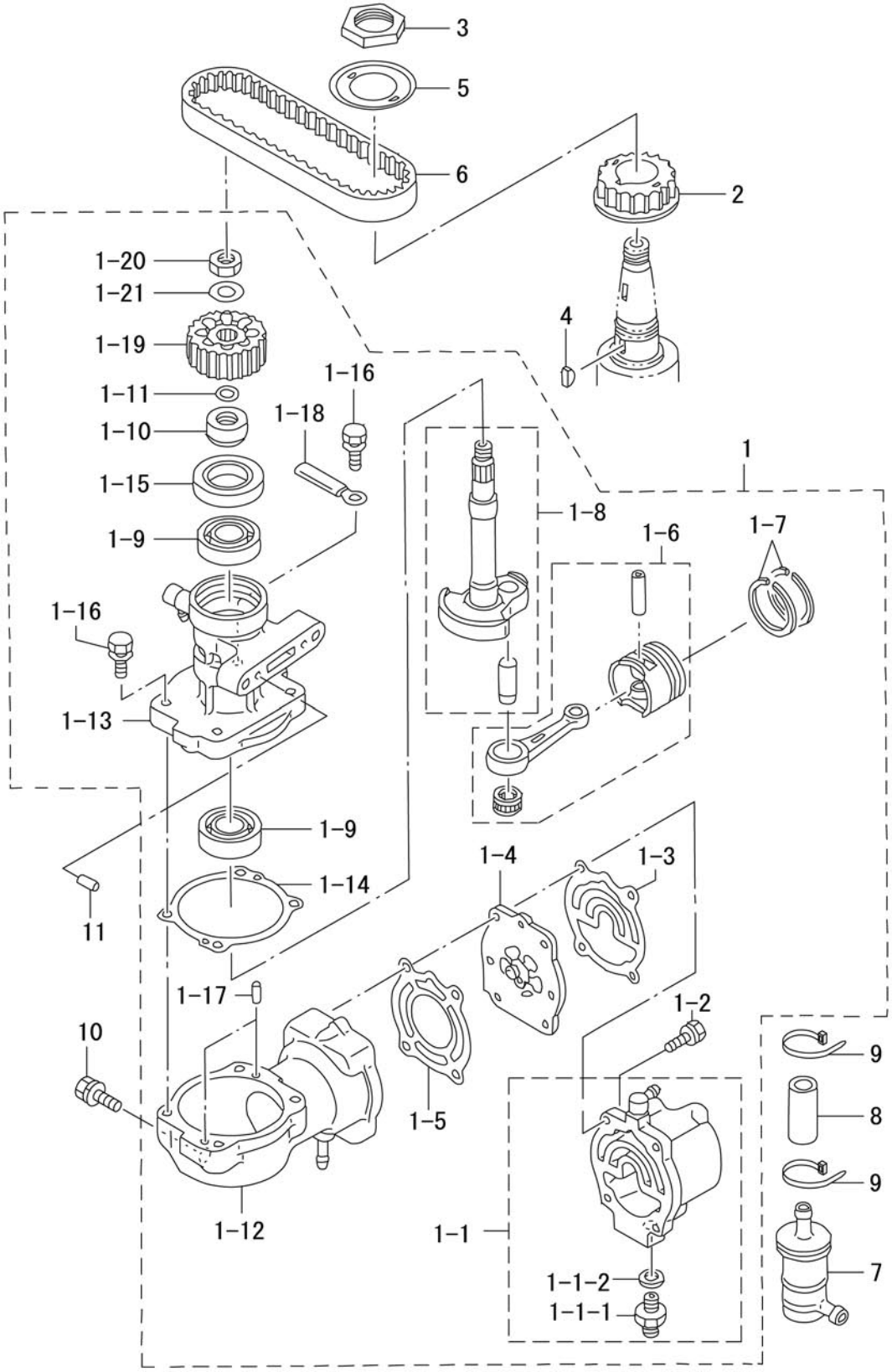

見出番号 Ref. No.	部品番号 Part No.	部　品　名 Description	個数 Q'ty D 90 B	 D 70 B	備　考 Remarks
11-1	3T9B10000-3	ｴｱｺﾝﾌﾟﾚｯｻ Air Compressor	1	1	# 041522XD～
11-1-1	3Z5B10009-0	ｺﾝﾌﾟﾚｯｻﾍｯﾄﾞ（ﾆｯﾌﾟﾙ付） * Compressor Head (with Nipple)	1	1	# 041522XD～
11-1-1-1	3T5-04308-0	ﾎｰｽｼﾞｮｲﾝﾄｱﾀﾞﾌﾟﾀ ** Hose Joint Adapter	1	1	
11-1-1-2	3T5-04309-0	ﾒﾀﾙﾜｯｼｬ、10.2-17-2 ** Metal Washer, 10.2-17-2	1	1	
11-1-2	910124-7630	ﾎﾞﾙﾄ * Bolt	4	4	
11-1-3	3T5-10012-0	ｺﾝﾌﾟﾚｯｻﾍｯﾄﾞｶﾞｽｹｯﾄ * Compressor Head Gasket	1	1	
11-1-4	3T5-10010-0	ﾘｰﾄﾞﾊﾞﾙﾌﾞｱｯｼ * Reed Valve Ass'y	1	1	
11-1-5	3T5-10019-0	ﾊﾞﾙﾌﾞｼｰﾄｶﾞｽｹｯﾄ * Valve Seat Gasket	1	1	
11-1-6	3T5-87330-1	ﾋﾟｽﾄﾝ & ｺﾝﾛｯﾄﾞ * Piston & Connecting Rod	1	1	
11-1-7	3T5-10025-0	ﾋﾟｽﾄﾝﾘﾝｸﾞ * Piston Ring	2	2	
11-1-8	3T5-87331-0	ｸﾗﾝｸｼｬﾌﾄ * Crank Shaft	1	1	
11-1-9	9601-0-6203	ﾍﾞｱﾘﾝｸﾞ、6203 * Bearing, 6203	2	2	
11-1-10	3T5-10042-0	ｶﾗｰ、13.5-25-13 * Collar, 13.5-25-13	1	1	
11-1-11	3T5-10046-0	O ﾘﾝｸﾞ、13-1.9 * O-Ring, 13-1.9	1	1	
11-1-12	3Y9B10048-0	ｺﾝﾌﾟﾚｯｻｼﾘﾝﾀﾞ * Compressor Cylinder	1	1	
11-1-13	3T5B10051-0	ｺﾝﾌﾟﾚｯｻﾊｳｼﾞﾝｸﾞ * Compressor Housing	1	1	
11-1-14	3T5-10054-0	ｺﾝﾌﾟﾚｯｻﾊｳｼﾞﾝｸﾞｶﾞｽｹｯﾄ * Compressor Housing Gasket	1	1	
11-1-15	3T5-10041-0	ｵｲﾙｼｰﾙ、25-45-7 * Oil Seal, 25-45-7	1	1	
11-1-16	910103-5625	ﾎﾞﾙﾄ * Bolt	4	4	or 910113-5625
11-1-17	334-65012-0	ﾀﾞｳｴﾙﾋﾟﾝ、4-10 * Dowel Pin, 4-10	2	2	
11-1-18	309-06972-0	ｸﾗﾝﾌﾟ、6.5-47.5P * Clamp, 6.5-47.5P	1	1	
11-1-19	3T5-10062-0	ﾄﾞﾘﾌﾞﾝﾌﾟｰﾘ * Driven Pulley	1	1	
11-1-20	309-00132-0	ﾄﾞﾘﾌﾞﾝﾌﾟｰﾘﾅｯﾄ、10-P1.25 * Driven Pulley Nut, 10-P1.25	1	1	
11-1-21	3B7-01116-0	ﾜｯｼｬ、10.5-20-3.2 * Washer, 10.5-20-3.2	1	1	70A # 70376～ 90A # 00970～
11-2	3T9-10060-0	ﾄﾞﾗｲﾌﾞﾌﾟｰﾘ Drive Pulley	1	1	
11-3	3T5-10068-0	ﾌﾟｰﾘﾅｯﾄ Pulley Nut	1	1	
11-4	3T5-10131-0	ﾄﾞﾗｲﾌﾞﾌﾟｰﾘｷｰ Drive Pulley Key	1	1	
11-5	3T5-10063-0	ﾍﾞﾙﾄｶﾞｲﾄﾞ Belt Guide	1	1	
11-6	3T9-10061-0	ﾄﾞﾗｲﾌﾞﾍﾞﾙﾄ Drive Belt	1	1	
11-7	3T5-10130-0	ｴｱﾌｨﾙﾀ Air Filter	1	1	

エアコンプレッサ
Fig.11 AIR COMPRESSOR

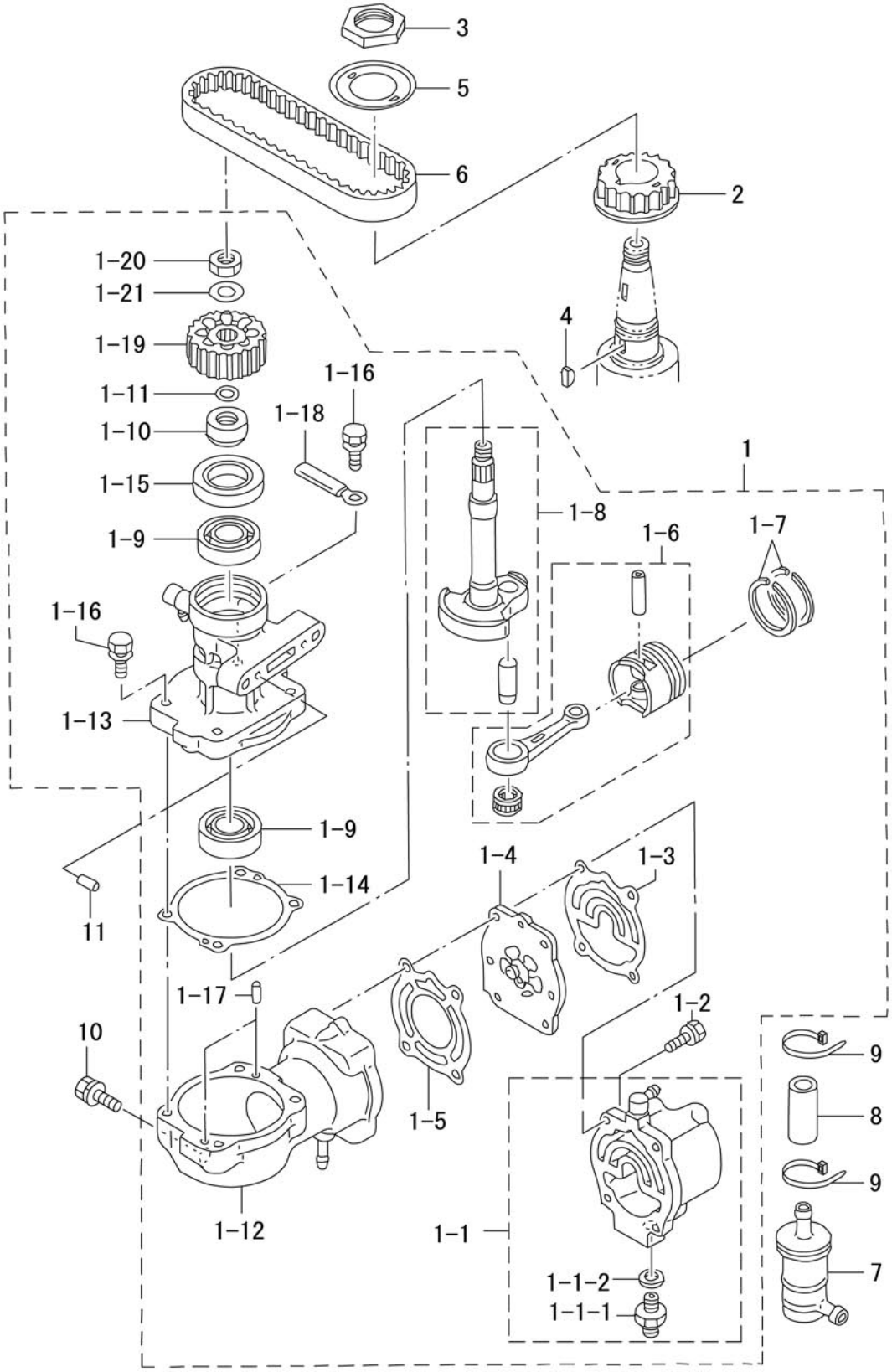

見出番号 Ref. No.	部品番号 Part No.	部　品　名 Description	個数 Q'ty D 90 B	個数 Q'ty D 70 B	備　考 Remarks
11-8	98AC-9-0055	ｴｱﾎｰｽ Air Hose	1	1	
11-9	3T5-84398-0	ﾘｰﾄﾞﾜｲﾔﾊﾞﾝﾄﾞ、104 Lead Wire Band, 104	2	2	
11-10	910103-7835	ﾎﾞﾙﾄ Bolt	3	3	
11-11	334-65012-0	ﾀﾞｳｴﾙﾋﾟﾝ、4-10 Dowel Pin, 4-10	2	2	

オイルポンプ
Fig.12 OIL PUMP

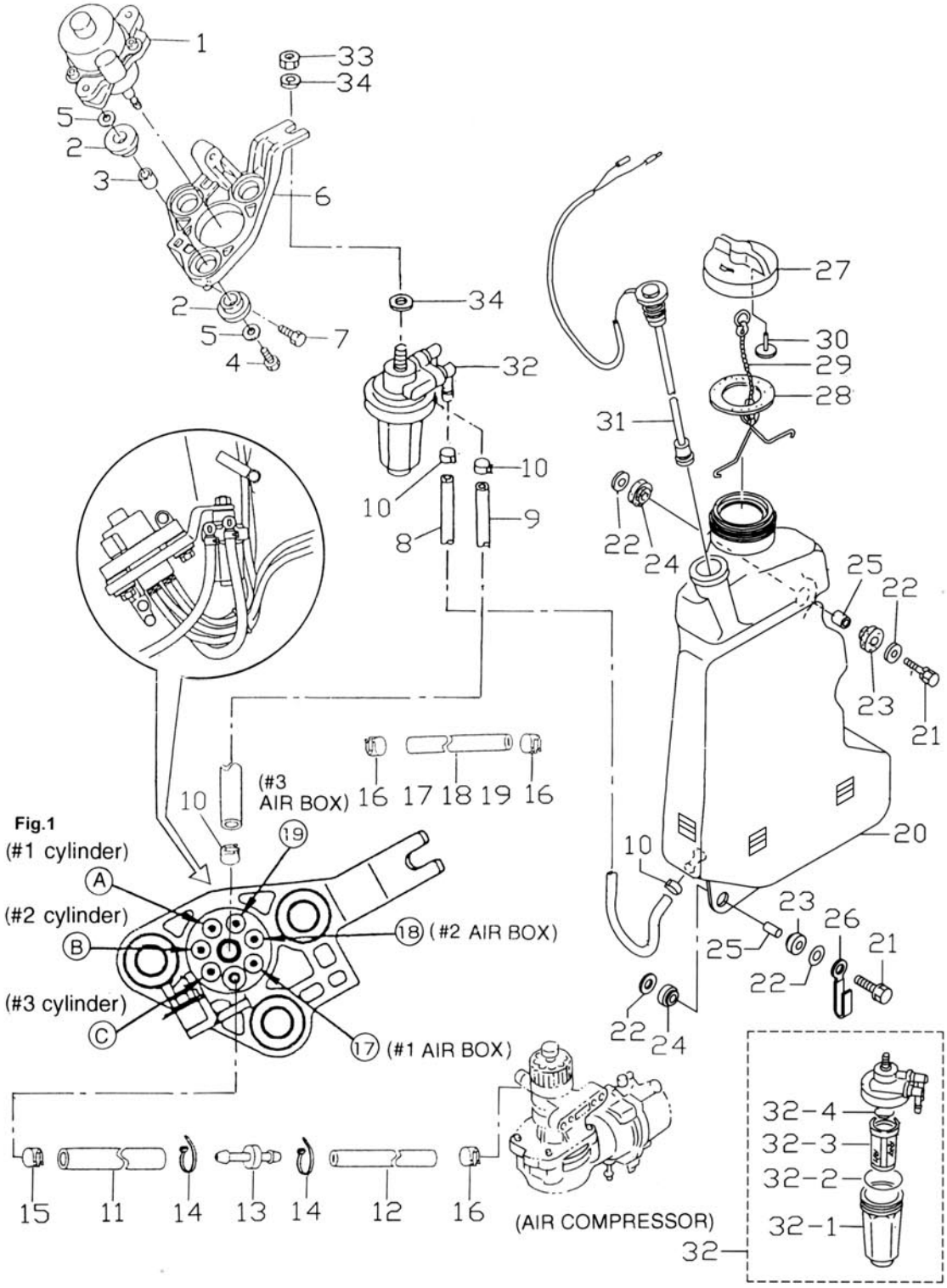

見出番号 Ref. No.	部品番号 Part No.	部　品　名 Description	個数 Q'ty D 90 B	個数 Q'ty D 70 B	備　考 Remarks
12-1	3T7-09010-0	ｴﾚｸﾄﾘｯｸｵｲﾙﾎﾟﾝﾌﾟ Electric Oil Pump	1	1	
12-2	345-67113-0	ﾗﾊﾞｰﾏｳﾝﾄ、12-18-2.5 Rubber Mount, 12-18-2.5	6	6	
12-3	3C7-67114-0	ｽﾍﾟｰｻ、8.4-12-17 Spacer, 8.4-12-17	3	3	
12-4	910113-0835	ﾎﾞﾙﾄ Bolt	3	3	70A2 # 70052～ 90A2 # 00516～
12-5	3B7-63730-0	ﾜｯｼｬ、8.4-24-1.5 Washer, 8.4-24-1.5	6	6	
12-6	3T7-09072-0	ｵｲﾙﾎﾟﾝﾌﾟﾌﾞﾗｹｯﾄ Oil Pomp Bracket	1	1	
12-7	910113-7630	ﾎﾞﾙﾄ Bolt	2	2	
12-8	99AA-6-1470	ｵｲﾙﾊﾟｲﾌﾟ A Oil Pipe “A”	1	1	# 027922XE～
12-9	99AA-6-0200	ｵｲﾙﾊﾟｲﾌﾟ B Oil Pipe “B”	1	1	
12-10	121-35143-0	ｸﾘｯﾌﾟ、φ9.5 Clip, φ9.5	4	4	
12-11	99AA-4-0040	ｵｲﾙﾊﾟｲﾌﾟ Oil Pipe	1	1	
12-12	99AA-2-0440	ｵｲﾙﾊﾟｲﾌﾟ Oil Pipe	1	1	
12-13	3T7-09076-0	ﾆｯﾌﾟﾙｼﾞｮｲﾝﾄ Nipple Joint	1	1	異径ﾆｯﾌﾟﾙ 70A2/90A2～ Reducer Nipple 70A2/90A2～
12-14	3T5-84398-0	ﾘｰﾄﾞﾜｲﾔﾊﾞﾝﾄﾞ、104 Lead Wire Band, 104	2	2	
12-15	151-35002-0	ｸﾘｯﾌﾟ、φ7.8 Clip, φ7.8	1	1	
12-16	3B7-09052-0	ｸﾘｯﾌﾟ、φ6.9 Clip, φ6.9	7	7	
12-17	99AA-2-0570	ｵｲﾙﾊﾟｲﾌﾟ Oil Pipe	1	1	ｵｲﾙﾎﾟﾝﾌﾟ～# 1 ｴｱﾎﾞｯｸｽ Oil Pump to # 1 Air Box
12-18	99AA-2-0400	ｵｲﾙﾊﾟｲﾌﾟ Oil Pipe	1	1	ｵｲﾙﾎﾟﾝﾌﾟ～# 2 ｴｱﾎﾞｯｸｽ Oil Pump to # 2 Air Box
12-19	99AA-2-0380	ｵｲﾙﾊﾟｲﾌﾟ Oil Pipe	1	1	ｵｲﾙﾎﾟﾝﾌﾟ～# 3 ｴｱﾎﾞｯｸｽ Oil Pump to # 3 Air Box
12-20	3T9-71010-1	ｵｲﾙﾀﾝｸ Oil Tank	1	1	# 027922XE～
12-21	910103-6630	ﾎﾞﾙﾄ Bolt	3	3	
12-22	346-67115-0	ﾜｯｼｬ、6.5-21-1.0 Washer, 6.5-21-1.0	6	6	
12-23	346-67113-0	ﾗﾊﾞｰﾏｳﾝﾄ、8.5-14-2.5 Rubber Mount, 8.5-14-2.5	3	3	
12-24	3B7-06920-0	ﾗﾊﾞｰﾏｳﾝﾄ、8.5-14-2.5 Rubber Mount, 8.5-14-2.5	3	3	
12-25	346-67114-0	ｽﾍﾟｰｻ、6.2-9-15.7 Spacer, 6.2-9-15.7	3	3	
12-26	3T4-06972-0	ｸﾗﾝﾌﾟ、6.5-87P Clamp, 6.5-87P	1	1	
12-27	3C8-71015-0	ｵｲﾙﾀﾝｸｷｬｯﾌﾟ Oil Tank Cap	1	1	
12-28	3C8-71016-0	ｶﾞｽｹｯﾄ、36-52-2 Gasket, 36-52-2	1	1	
12-29	3C8-71017-0	ﾀﾝｸｷｬｯﾌﾟﾌｯｸ Tank Cap Hook	1	1	
12-30	3C8-71018-0	ﾀﾝｸｷｬｯﾌﾟﾁｪｯｸﾊﾞﾙﾌﾞ Tank Cap Check Valve	1	1	

オイルポンプ
Fig.12 OIL PUMP

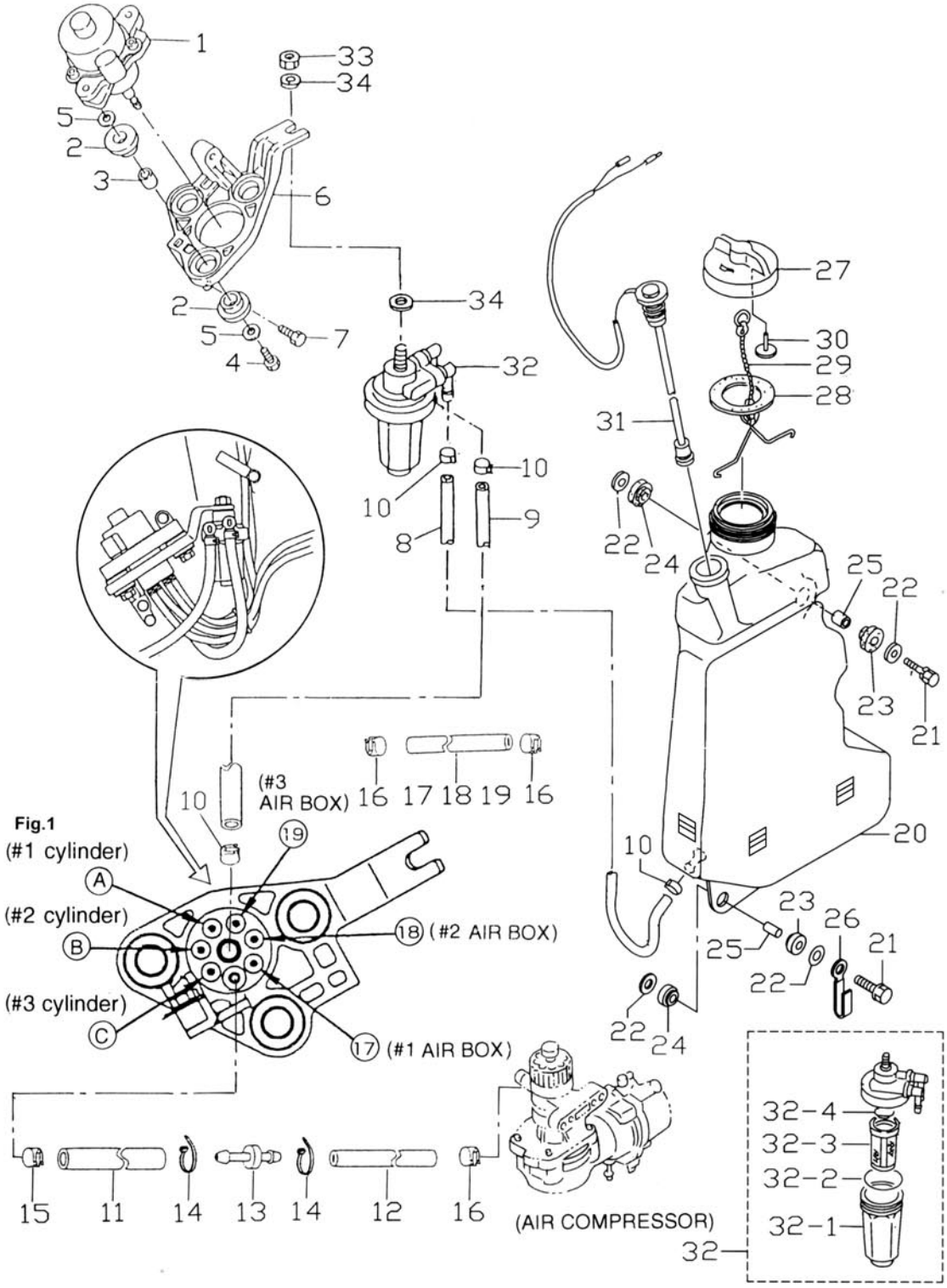

見出番号 Ref. No.	部品番号 Part No.	部　品　名 Description	個数 Q'ty D 90 B	個数 Q'ty D 70 B	備　考 Remarks
12-31	3T9-71020-0	ｵｲﾙﾚﾍﾞﾙｾﾝｻ Oil Level Sensor	1	1	
12-32	3C7-71030-0	ｵｲﾙﾌｨﾙﾀ Oil Filter	1	1	
12-32-1	3B7-02237-0	ｶｯﾌﾟ ＊ Cup	1	1	
12-32-2	3B7-02235-0	O ﾘﾝｸﾞ A ＊ O-Ring “A”	1	1	
12-32-3	3C7-71033-0	ﾌｨﾙﾀ ＊ Filter	1	1	
12-32-4	3B7-02236-0	O ﾘﾝｸﾞ B ＊ O-Ring “B”	1	1	
12-33	930113-0800	ﾅｯﾄ Nut	1	1	
12-34	940113-0800	ﾜｯｼｬ Washer	2	2	

ﾄﾞﾗｲﾌﾞｼｬﾌﾄﾊｳｼﾝｸﾞ

Fig.13 DRIVE SHAFT HOUSING

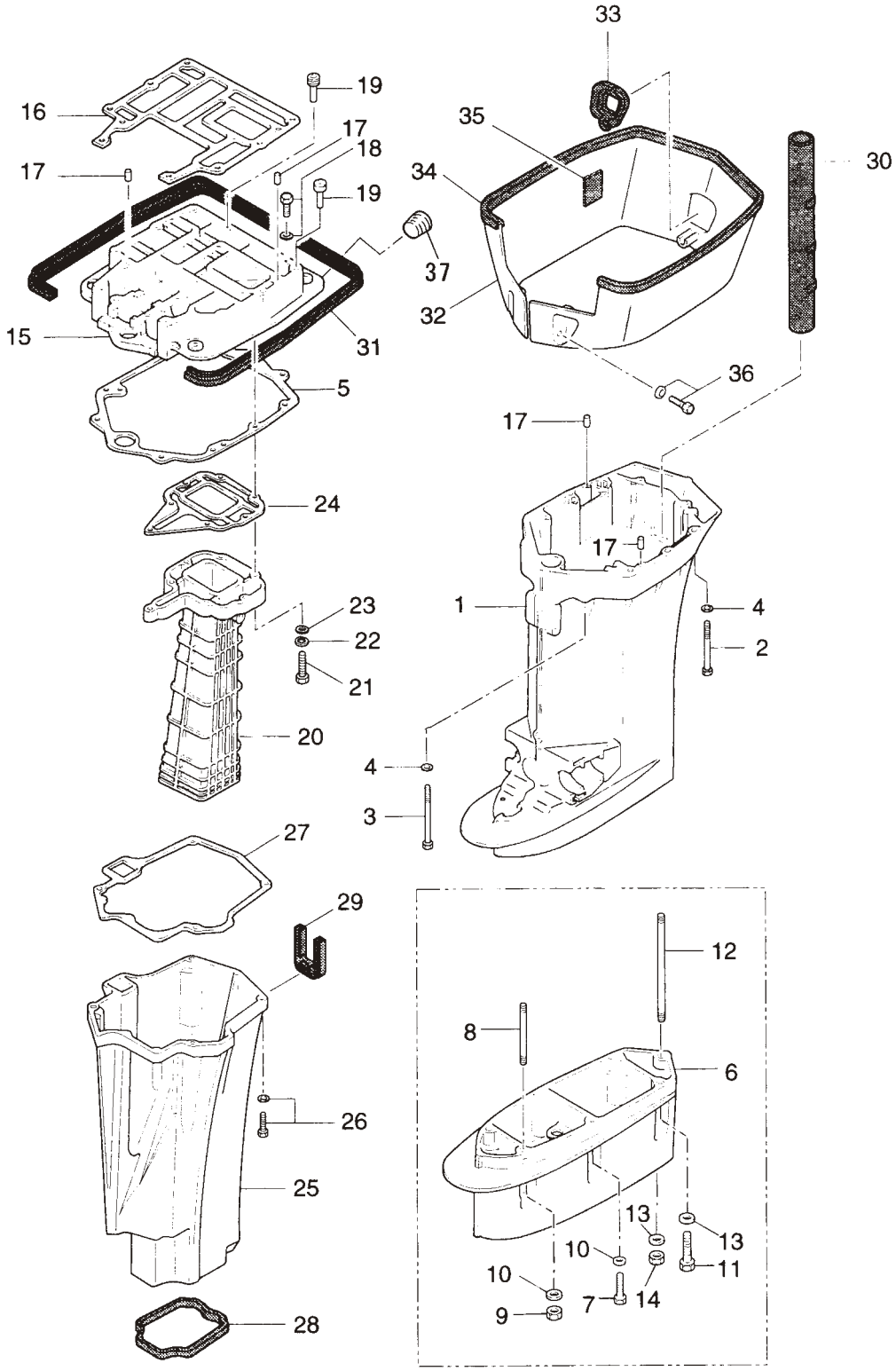

見出番号 Ref. No.	部品番号 Part No.	部　品　名 Description	個数 Q'ty D 90 B	個数 Q'ty D 70 B	備　考 Remarks
13-1	3T9Q61030-1	ﾄﾞﾗｲﾌﾞｼｬﾌﾄﾊｳｼﾞﾝｸﾞ Drive Shaft Housing	1	1	
13-2	3B7-61017-2	ﾎﾞﾙﾄ、8-105 Bolt, 8-105	6	6	
13-3	3B7-61018-1	ﾎﾞﾙﾄ、8-115 Bolt, 8-115	2	2	
13-4	940113-0800	ﾜｯｼｬ Washer	8	8	
13-5	3B7-61012-0	ﾄﾞﾗｲﾌﾞｼｬﾌﾄﾊｳｼﾞﾝｸﾞｶﾞｽｹｯﾄ Drive Shaft Housing Gasket	1	1	
13-6	3B7Q61110-0	ｴｸｽﾃﾝｼｮﾝﾊｳｼﾞﾝｸﾞ UL Extension Housing “UL”	1	1	
13-7	916189-0835	ﾎﾞﾙﾄ Bolt	3	3	
13-8	915313-0825	ｽﾀｯﾄﾞﾎﾞﾙﾄ Stud Bolt	1	1	
13-9	930113-0800	ﾅｯﾄ Nut	1	1	
13-10	940113-0800	ﾜｯｼｬ Washer	4	4	ﾄﾗﾝｻﾑ UL 用 for Transom “UL”
13-11	3B7-60001-2	ﾎﾞﾙﾄ、10-40 Bolt, 10-40	2	2	
13-12	3B7-61112-0	ｽﾀｯﾄﾞﾎﾞﾙﾄ、10-165 Stud Bolt, 10-165	1	1	
13-13	940213-1000	ﾜｯｼｬ Washer	3	3	
13-14	3B7-61114-0	ﾅｯﾄ、10-P1.25 Nut, 10-P1.25	1	1	
13-15	3T9Q01301-0	ｴﾝｼﾞﾝﾍﾞｰｽ Engine Basement	1	1	
13-16	3B7-01303-1	ｴﾝｼﾞﾝﾍﾞｰｽｶﾞｽｹｯﾄ Engine Basement Gasket	1	1	
13-17	345-01111-0	ﾀﾞｳｴﾙﾋﾟﾝ、6-12 Dowel Pin, 6-12	4	4	
13-18	910113-5635	ﾎﾞﾙﾄ Bolt	2	2	
13-19	3B7-67179-0	ｴﾝｼﾞﾝﾍﾞｰｽﾄﾞﾚﾝﾌﾟﾗｸﾞ B Engine Basement Drain Plug “B”	2	2	
13-20	3B7-02311-0	ｴｷｿﾞｰｽﾄﾊﾟｲﾌﾟ Exhaust Pipe	1	1	
13-21	910114-0635	ﾎﾞﾙﾄ Bolt	7	7	
13-22	941303-0600	ｽﾌﾟﾘﾝｸﾞﾜｯｼｬ Spring Washer	7	7	
13-23	940113-0600	ﾜｯｼｬ Washer	7	7	
13-24	3B7-02312-1	ｴｷｿﾞｰｽﾄﾊﾟｲﾌﾟｶﾞｽｹｯﾄ Exhaust Pipe Gasket	1	1	
13-25	3D8-61180-0	ｴｷｿﾞｰｽﾄﾊｳｼﾞﾝｸﾞ Exhaust Housing	1	1	
13-26	910113-5830	ﾎﾞﾙﾄ Bolt	4	4	
13-27	3B7-61181-1	ｴｷｿﾞｰｽﾄﾊｳｼﾞﾝｸﾞｶﾞｽｹｯﾄ Exhaust Housing Gasket	1	1	
13-28	3B7-61182-0	ｴｷｿﾞｰｽﾄﾊｳｼﾞﾝｸﾞｸﾞﾛﾒｯﾄ Exhaust Housing Grommet	1	1	
13-29	3B7-61207-0	ｱｲﾄﾞﾙｴｷｿﾞｰｽﾄﾎﾟｰﾄｸﾞﾛﾒｯﾄ Idle Exhaust Port Grommet	1	1	
13-30	3B7-61186-0	ﾘﾊﾞｰｽｶﾞｽﾊﾟｯｾｰｼﾞﾊﾟｲﾌﾟ Reverse Gas Passage Pipe	1	1	

ﾄﾞﾗｲﾌﾞｼｬﾌﾄﾊｳｼﾝｸﾞ
Fig.13 DRIVE SHAFT HOUSING

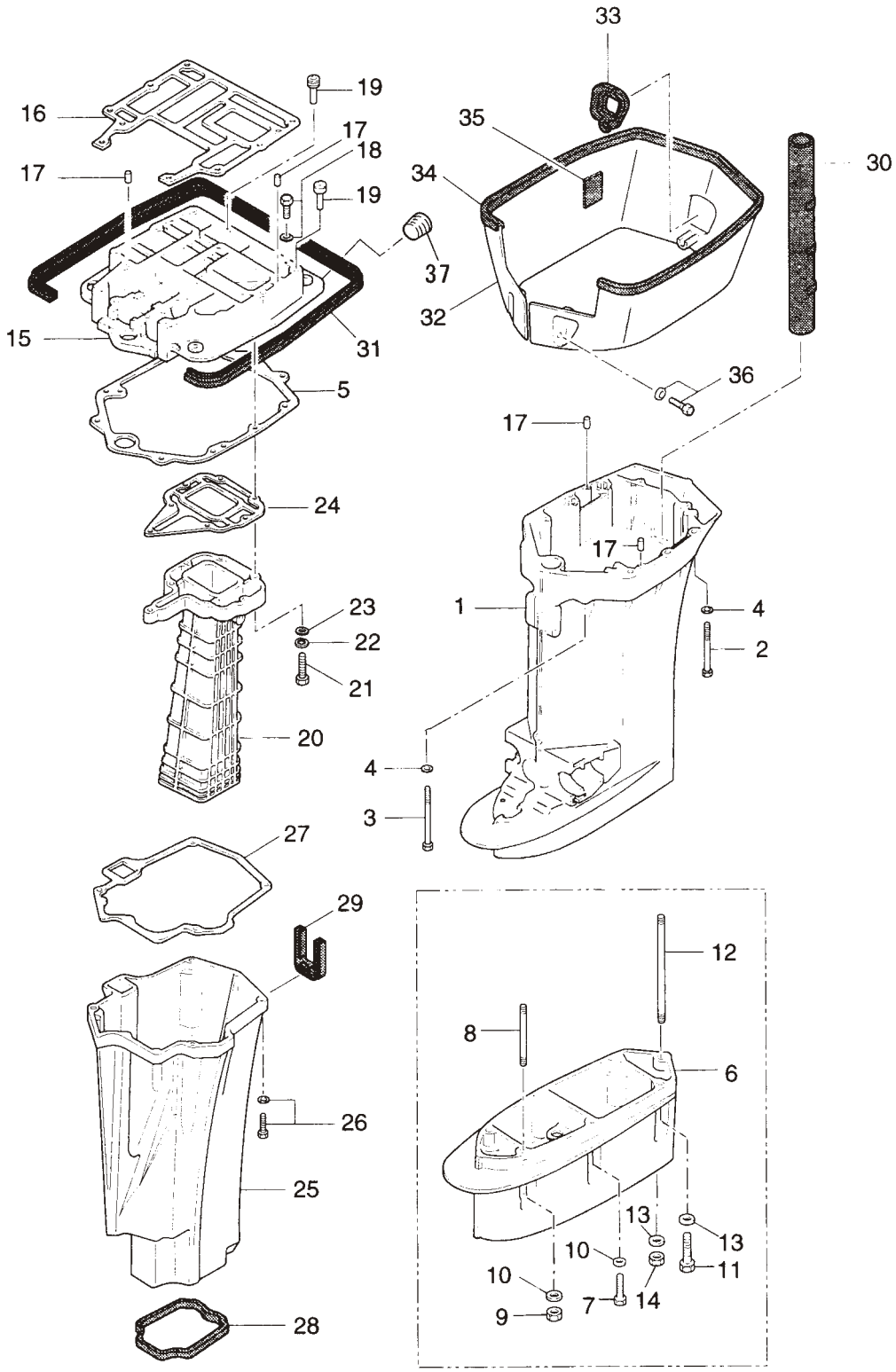

見出番号 Ref. No.	部品番号 Part No.	部　品　名 Description	個数 Q'ty D 90 B	個数 Q'ty D 70 B	備　考 Remarks
13-31	3B7-67116-0	ｴﾝｼﾞﾝﾍﾞｰｽｼｰﾙ Engine Basement Seal	1	1	
13-32	3C7Q61210-1	ｴﾌﾟﾛﾝ Apron	1	1	
13-33	3C7-61212-0	ｴﾌﾟﾛﾝｸﾞﾛﾒｯﾄ Apron Grommet	1	1	
13-34	3E0-61213-0	ｴﾌﾟﾛﾝｼｰﾙ Apron Seal	1	1	
13-35	3C7-61216-0	ｴﾌﾟﾛﾝﾊﾟｯﾄﾞ Apron Pad	2	2	
13-36	910113-5612	ﾎﾞﾙﾄ B0lt	4	4	
13-37	3H6-07257-0	ｴｷｿﾞｰｽﾄﾌﾟﾗｸﾞ Exhaust Plug	1	1	

ｷﾞﾔｹｰｽ（ﾄﾞﾗｲﾌﾞｼｬﾌﾄ）
Fig.14　GEAR CASE (DRIVE SHAFT)

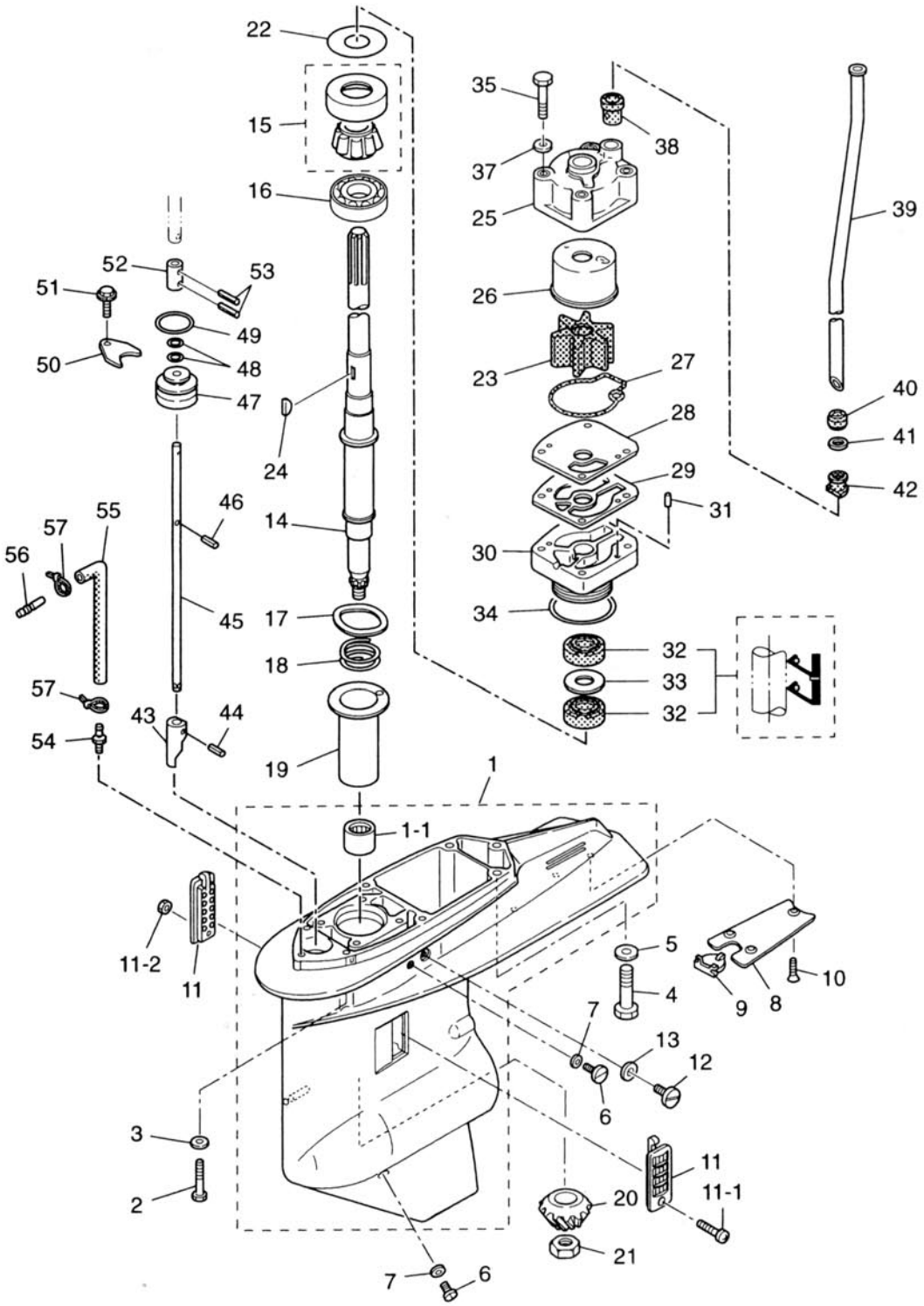

見出番号 Ref. No.	部品番号 Part No.	部　品　名 Description	個数 Q'ty D 90 B	個数 Q'ty D 70 B	備　考 Remarks
14-1	3C7Q60000-6	ｷﾞﾔｹｰｽ Gear Case	1	1	90B # 00970～ 70B # 70376～
14-1-1	3C7-60211-1	ﾆｰﾄﾞﾙﾍﾞｱﾘﾝｸﾞ、28.6-38.1-31.8 * Needle Bearing, 28.6-38.1-31.8	1	1	
14-2	916189-0835	ﾎﾞﾙﾄ Bolt	4	4	
14-3	940113-0800	ﾜｯｼｬ Washer	4	4	
14-4	3B7-60001-2	ﾎﾞﾙﾄ、10-40 Bolt, 10-40	3	3	
14-5	940213-1000	ﾜｯｼｬ Washer	3	3	
14-6	332-60005-2	ｵｲﾙﾌﾟﾗｸﾞ Oil Plug	2	2	
14-7	332-60006-0	ｶﾞｽｹｯﾄ、8.1-15-1 Gasket, 8.1-15-1	2	2	
14-8	3B7-60012-1	ｷﾞﾔｹｰｽﾌﾟﾚｰﾄ Gear Case Plate	1	1	
14-9	3B7-60013-0	ｷﾞﾔｹｰｽﾌﾟﾚｰﾄﾌﾟﾗｸﾞ Gear Case Plate Plug	1	1	
14-10	921613-0614	ｽｸﾘｭ Screw	3	3	
14-11	3C7-60235-1	ｳｫｰﾀｽﾄﾚｰﾅｾｯﾄ Water Strainer Set	1 set	1 set	
14-11-1	921503-0445	ｽｸﾘｭ * Screw	1	1	
14-11-2	930403-0400	ﾅｲﾛﾝﾅｯﾄ、4-P0.7 * Nylon Nut, 4-P0.7	1	1	
14-12	3B7-60015-1	ｳｫｰﾀﾌﾟﾗｸﾞ Water Plug	1	1	
14-13	3B7-60016-0	ｶﾞｽｹｯﾄ、10.1-15-1 Gasket, 10.1-15-1	1	1	
14-14	3C7-64302-2	ﾄﾞﾗｲﾌﾞｼｬﾌﾄ L Drive Shaft "L"	1	1	90B # 00970～ 70B # 70376～
	3C7-64303-2	ﾄﾞﾗｲﾌﾞｼｬﾌﾄ UL Drive Shaft "UL"	1	1	
14-15	3C7-60213-0	ﾍﾞｱﾘﾝｸﾞ、0506 Bearing, 0506	1	1	
14-16	3C7-60214-0	ﾍﾞｱﾘﾝｸﾞ、16007 Bearing, 16007	1	1	
14-17	3C7-60210-0	ｳｪｰﾌﾞﾜｯｼｬ、d=47.2 Wave Washer, d=47.2	1	1	
14-18	3C7-64327-0	ﾄﾞﾗｲﾌﾞｼｬﾌﾄｽﾌﾟﾘﾝｸﾞ Drive Shaft Spring	1	1	
14-19	3C7-64328-0	ﾄﾞﾗｲﾌﾞｼｬﾌﾄｽﾌﾟﾘﾝｸﾞｶﾞｲﾄﾞ Drive Shaft Spring Guide	1	1	
14-20	3B7-64020-0	ﾍﾞﾍﾞﾙｷﾞﾔ B Bevel Gear "B"	1	-	
	3J5-64020-0	ﾍﾞﾍﾞﾙｷﾞﾔ B Bevel Gear "B"	-	1	
14-21	3B7-64027-0	ﾍﾞﾍﾞﾙｷﾞﾔ B ﾅｯﾄ Bevel Gear "B" Nut	1	1	
14-22	353-64014-0	ｼﾑ、52-60.5-0.3 Shim, 52-60.5-0.3	AR	AR	
	353-64015-0	ｼﾑ、52-60.5-0.15 Shim, 52-60.5-0.15	AR	AR	
	353-64016-0	ｼﾑ、52-60.5-0.1 Shim, 52-60.5-0.1	AR	AR	
14-23	3C7-65021-1	ｳｫｰﾀﾎﾟﾝﾌﾟｲﾝﾍﾟﾗ Water Pump Impeller,	1	1	

ｷﾞﾔｹｰｽ（ﾄﾞﾗｲﾌﾞｼｬﾌﾄ）
Fig.14 GEAR CASE (DRIVE SHAFT)

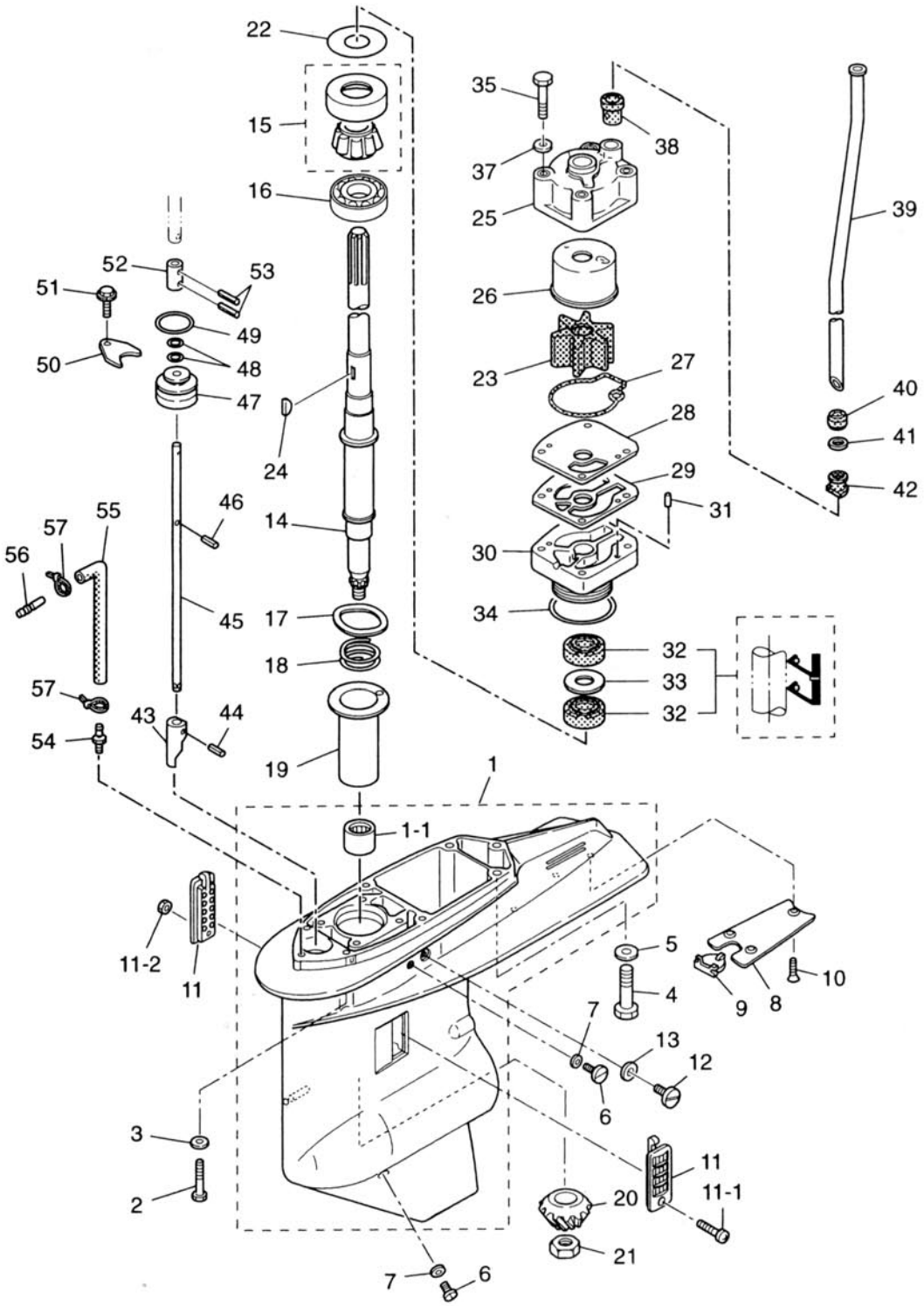

見出番号 Ref. No.	部品番号 Part No.	部　品　名 Description	個数 Q'ty D 90 B	個数 Q'ty D 70 B	備　考 Remarks
14-24	3B7-65022-0	ｳｫｰﾀﾎﾟﾝﾌﾟｲﾝﾍﾟﾗｷｰ Water Pump Impeller Key	1	1	
14-25	3C7-65016-0	ﾎﾟﾝﾌﾟｹｰｽ (ｱｯﾊﾟ) Pump Case (Upper)	1	1	
14-26	3C7-65011-0	ﾎﾟﾝﾌﾟｹｰｽﾗｲﾅ Pump Case Liner	1	1	
14-27	3C7-65018-0	ﾎﾟﾝﾌﾟｹｰｽｼｰﾙ Pump Case Seal	1	1	
14-28	3C7-65025-0	ｳｫｰﾀﾎﾟﾝﾌﾟｶﾞｲﾄﾞﾌﾟﾚｰﾄ Water Pump Guide Plate	1	1	
14-29	3C7-65029-0	ｶﾞｲﾄﾞﾌﾟﾚｰﾄｶﾞｽｹｯﾄ Guide Plate Gasket	1	1	
14-30	3C7-65017-2	ﾎﾟﾝﾌﾟｹｰｽ (ﾛﾜ) Pump Case (Lower)	1	1	
14-31	334-65012-0	ﾀﾞｳｴﾙﾋﾟﾝ、4-10 Dowel Pin, 4-10	2	2	
14-32	3C7-60223-1	ｵｲﾙｼｰﾙ、22-42-7 Oil Seal, 22-42-7	2	2	
14-33	346-64084-0	ｼﾑ、35-41.9-0.5 Shim, 35-41.9-0.5	1	1	
14-34	3B7-65015-0	O ﾘﾝｸﾞ、3.1-54.4 O-Ring, 3.1-54.4	1	1	
14-35	916113-0885	ﾎﾞﾙﾄ Bolt	4	4	
14-37	940113-0800	ﾜｯｼｬ Washer	4	4	
14-38	3C7-65014-0	ｳｫｰﾀﾊﾟｲﾌﾟｼｰﾙ (ﾛﾜ) Water Pipe Seal (Lower)	1	1	
14-39	3C7-65110-0	ｳｫｰﾀﾊﾟｲﾌﾟ L Water Pipe “L”	1	1	ﾄﾗﾝｻﾑ L 用 for Transom “L”
	3C7-65120-0	ｳｫｰﾀﾊﾟｲﾌﾟ UL Water Pipe “UL”	1	1	ﾄﾗﾝｻﾑ UL 用 for Transom “UL”
14-40	3C7-65206-0	ｳｫｰﾀﾊﾟｲﾌﾟｼｰﾙ (ｱｯﾊﾟ) Water Pipe Seal (Upper)	1	1	
14-41	345-65205-0	ｶﾗｰ、18-20-4.5 Collar, 18-20-4.5	1	1	
14-42	3C7-65204-0	ｳｫｰﾀﾊﾟｲﾌﾟｵｰｸｼﾞｭｱﾘｰﾏｳﾝﾄ Water Pipe Auxiliary Mount	1	1	ｳｫｰﾀﾊﾟｲﾌﾟﾛｯｸﾗﾊﾞｰ Water Pipe Locking Rubber
14-43	3B7-66011-1	ｸﾗｯﾁｶﾑ Clutch Cam	1	1	
14-44	951403-3516	ｽﾌﾟﾘﾝｸﾞﾋﾟﾝ、3.5-16 Spring Pin, 3.5-16	1	1	
14-45	3B7-66013-1	ｶﾑﾛｯﾄﾞ L Cam Rod “L”	1	1	ﾄﾗﾝｻﾑ L 用 for Transom “L”
	3B7-66014-1	ｶﾑﾛｯﾄﾞ UL Cam Rod “UL”	1	1	ﾄﾗﾝｻﾑ UL 用 for Transom “UL”
14-46	951403-3510	ｽﾌﾟﾘﾝｸﾞﾋﾟﾝ、3.5-10 Spring Pin, 3.5-10	1	1	
14-47	3B7-66031-1	ｶﾑﾛｯﾄﾞﾌﾞｯｼﾝｸﾞ Cam Rod Bushing	1	1	
14-48	345-66021-0	O ﾘﾝｸﾞ、1.9-6.8 O-Ring, 1.9-6.8	2	2	
14-49	3B7-66023-0	O ﾘﾝｸﾞ、3.5-27.7 O-Ring, 3.5-27.7	1	1	
14-50	353-66024-0	ｽﾄｯﾊﾟ Stopper	1	1	
14-51	910103-6612	ﾎﾞﾙﾄ Bolt	1	1	
14-52	353-66241-1	ｼﾌﾄﾛｯﾄﾞｼﾞｮｲﾝﾄ Shift Rod Joint	1	1	

ｷﾞﾔｹｰｽ（ﾄﾞﾗｲﾌﾞｼｬﾌﾄ）
Fig.14 GEAR CASE (DRIVE SHAFT)

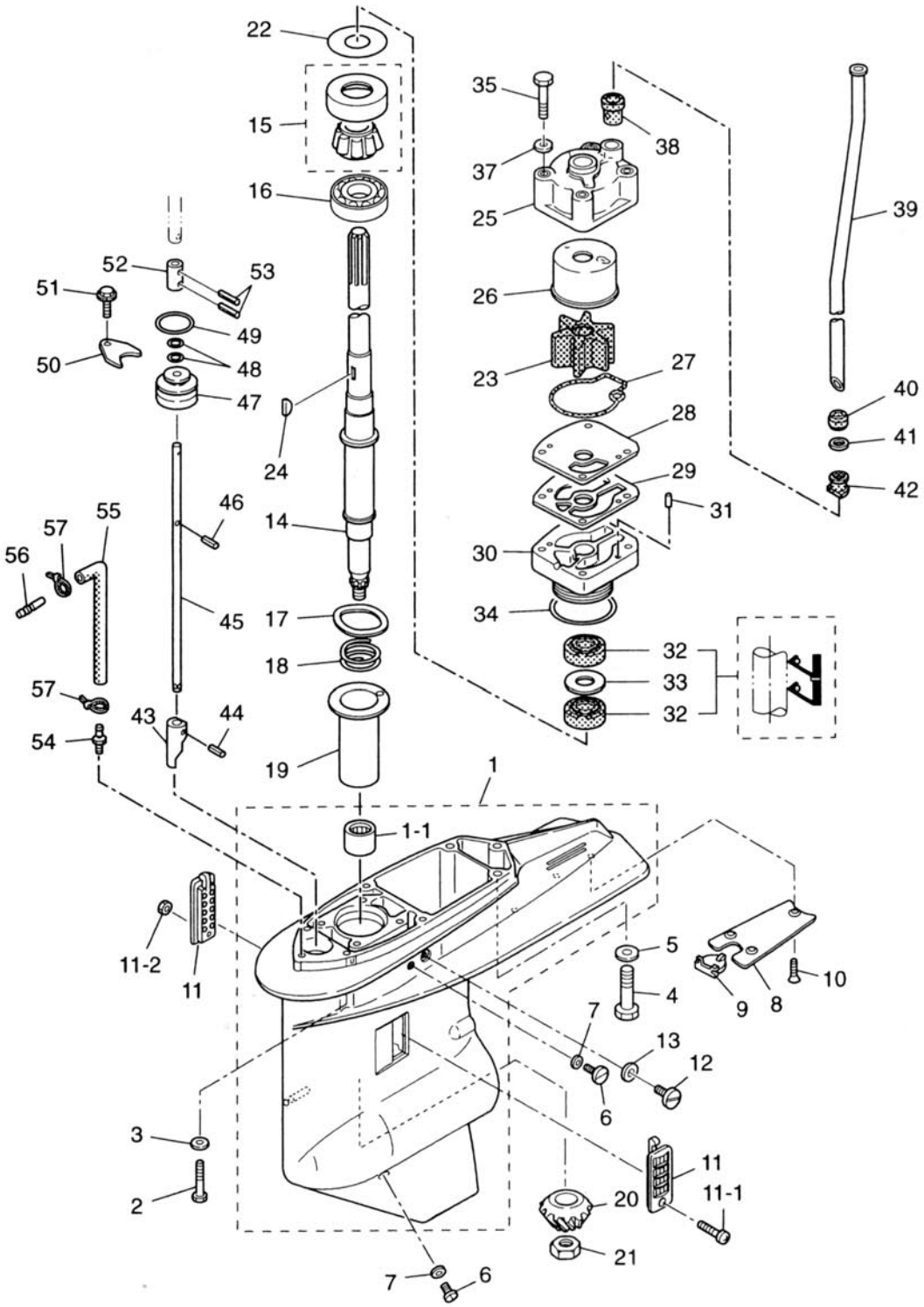

見出番号 Ref. No.	部品番号 Part No.	部　品　名 Description	個数 Q'ty D 90 B	個数 Q'ty D 70 B	備　考 Remarks
14-53	951403-3516	ｽﾌﾟﾘﾝｸﾞﾋﾟﾝ、3.5-16 Spring Pin, 3.5-16	2	2	
14-54	3C7-60017-0	ﾆｯﾌﾟﾙ、6-1/8 Nipple, 6-1/8	1	1	ｽﾋﾟｰﾄﾞﾒｰﾀ 用 for Speedometer OPT
14-55	98AL-4-0800	ｽﾋﾟｰﾄﾞﾒｰﾀﾊﾟｲﾌﾟ L Speedometer Pipe “L”	1	1	ﾄﾗﾝｻﾑ L 用 for Transom “L” OPT
	98AL-4-0920	ｽﾋﾟｰﾄﾞﾒｰﾀﾊﾟｲﾌﾟ UL Speedometer Pipe “UL”	1	1	ﾄﾗﾝｻﾑ UL 用 for Transom “UL” OPT
14-56	3C7-60018-0	ﾆｯﾌﾟﾙ、6-6 Nipple, 6-6	1	1	OPT
14-57	353-84398-0	ﾘｰﾄﾜｲﾔﾊﾞﾝﾄﾞ、100 Lead Wire Band, 100	2	2	OPT

ｷﾞﾔｹｰｽ（ﾌﾟﾛﾍﾟﾗｼｬﾌﾄ）
Fig.15 GEAR CASE (PROPELLER SHAFT)

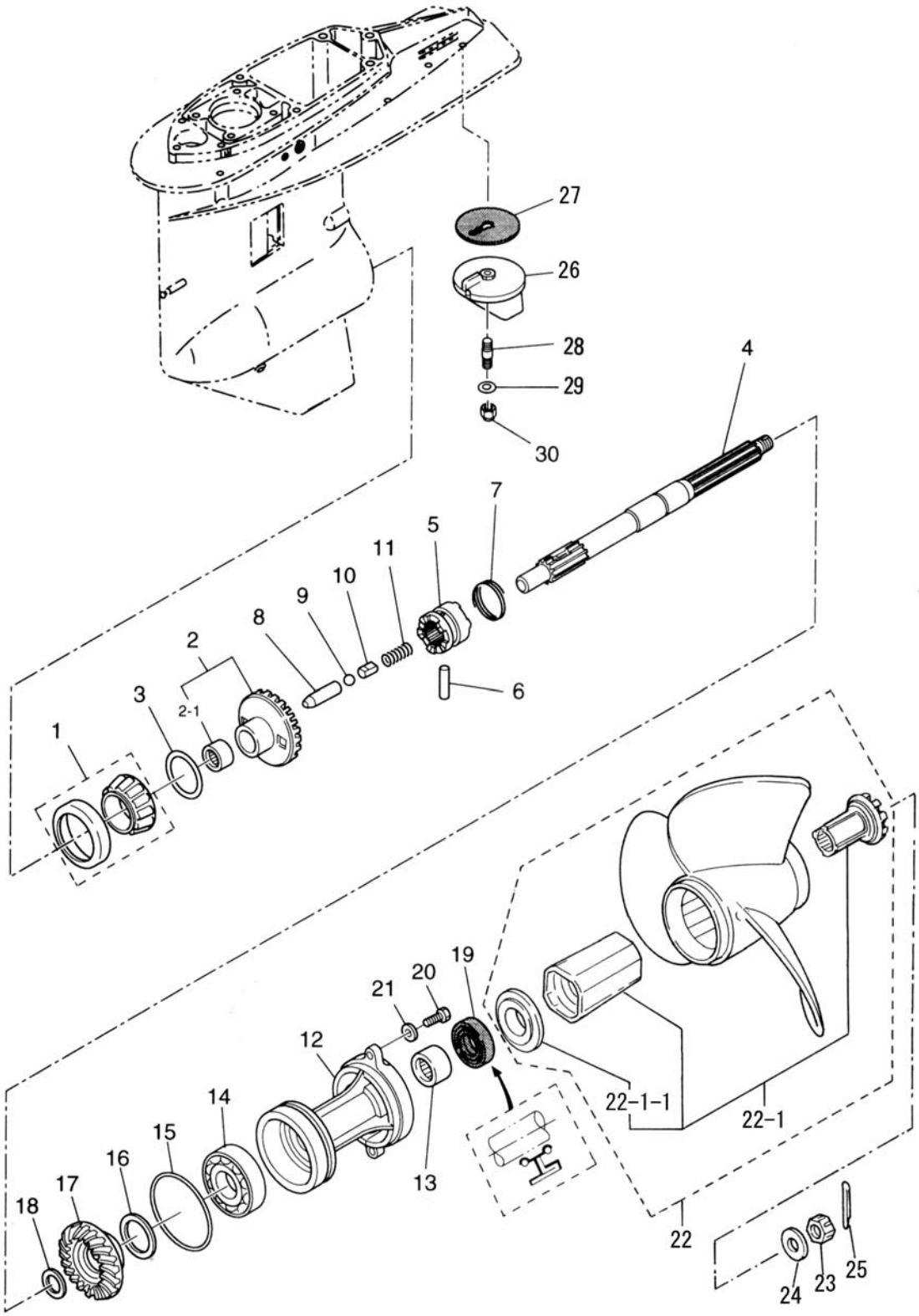

見出番号 Ref. No.	部品番号 Part No.	部　品　名 Description	個数 Q'ty D 90 B	個数 Q'ty D 70 B	備　考 Remarks
15-1	3C7-60215-0	ﾃｰﾊﾟｰﾛｰﾗﾍﾞｱﾘﾝｸﾞ、30209 Taper Roller Bearing, 30209	1	1	
15-2	3D8-64010-0	ﾍﾞﾍﾞﾙｷﾞﾔ A Bevel Gear “A”	1	-	
	3J5-64010-0	ﾍﾞﾍﾞﾙｷﾞﾔ A Bevel Gear “A”	-	1	
15-2-1	3B7-64011-0	ﾆｰﾄﾞﾙﾍﾞｱﾘﾝｸﾞ、25-32-26 ＊ Needle Bearing, 25-32-26	1	1	
15-3	3B7-64015-0	ｼﾑ、47-57-0.15 Shim, 47-57-0.15	AR	AR	
	3B7-64016-0	ｼﾑ、47-57-0.1 Shim, 47-57-0.1	AR	AR	
15-4	3B7-64211-0	ﾌﾟﾛﾍﾟﾗｼｬﾌﾄ Propeller Shaft	1	1	
15-5	3C7-64215-0	ｸﾗｯﾁ Clutch	1	1	
15-6	3B7-64218-0	ｸﾗｯﾁﾋﾟﾝ Clutch Pin	1	1	
15-7	3B7-64219-1	ｸﾗｯﾁﾋﾟﾝｽﾅｯﾌﾟ Clutch Pin Snap	1	1	
15-8	3B7-64223-0	ｸﾗｯﾁﾌﾟｯｼｭﾛｯﾄﾞ Clutch Push Rod	1	1	
15-9	965002-1609	ｽﾁｰﾙﾎﾞｰﾙ、9/16 Steel Ball, 9/16	1	1	
15-10	3B7-64222-0	ｸﾗｯﾁｽﾌﾟﾘﾝｸﾞﾘﾃｰﾅ Clutch Spring Retainer	1	1	
15-11	346-64221-0	ｸﾗｯﾁｽﾌﾟﾘﾝｸﾞ Clutch Spring	1	1	
15-12	3B7Q60101-1	ﾌﾟﾛﾍﾟﾗｼｬﾌﾄﾊｳｼﾞﾝｸﾞ Propeller Shaft Housing	1	1	
15-13	3B7-60211-0	ﾆｰﾄﾞﾙﾍﾞｱﾘﾝｸﾞ、30-40-30 Needle Bearing, 30-40-30	1	1	
15-14	9601-0-6208	ﾍﾞｱﾘﾝｸﾞ、6208 Bearing, 6208	1	1	
15-15	3B7-60103-0	O ﾘﾝｸﾞ、3.1-94.4 O-Ring, 3.1-94.4	1	1	
15-16	3B7-64036-0	ｼﾑ、42-50-0.15 Shim, 42-50-0.15	AR	AR	
	3B7-64037-0	ｼﾑ、42-50-0.1 Shim, 42-50-0.1	AR	AR	
15-17	3C7-64093-0	ﾍﾞﾍﾞﾙｷﾞﾔ C Bevel Gear “C”	1	-	
	3J5-64093-0	ﾍﾞﾍﾞﾙｷﾞﾔ C Bevel Gear “C”	-	1	
15-18	3B7-64032-0	ﾍﾞﾍﾞﾙｷﾞﾔ C ﾜｯｼｬ Bevel Gear “C” Washer	AR	AR	t=3.2
	3B7-64034-0	ﾍﾞﾍﾞﾙｷﾞﾔ C ﾜｯｼｬ Bevel Gear “C” Washer	AR	AR	t=3.0
	3B7-64035-0	ﾍﾞﾍﾞﾙｷﾞﾔ C ﾜｯｼｬ Bevel Gear “C” Washer	AR	AR	t=2.8
15-19	3B7-60111-0	ｵｲﾙｼｰﾙ、30-50-12 Oil Seal, 30-50-12	1	1	
15-20	3C7-60108-0	ﾎﾞﾙﾄ、8-30 ﾌﾟﾚｺｰﾄ Bolt, 8-30 Pre-coated	2	2	
15-21	940213-0800	ﾜｯｼｬ Washer	2	2	
15-22	3N4W64523-1	ﾌﾟﾛﾍﾟﾗ M-11 (3×355×279) Propeller M-11 (3×14.0×11.0)	1	1	
	3N4W64527-1	ﾌﾟﾛﾍﾟﾗ M-13 (3×355×330) Propeller M-13 (3×14.0×13.0)	1	1	

ｷﾞﾔｹｰｽ（ﾌﾟﾛﾍﾟﾗｼｬﾌﾄ）
Fig.15 GEAR CASE (PROPELLER SHAFT)

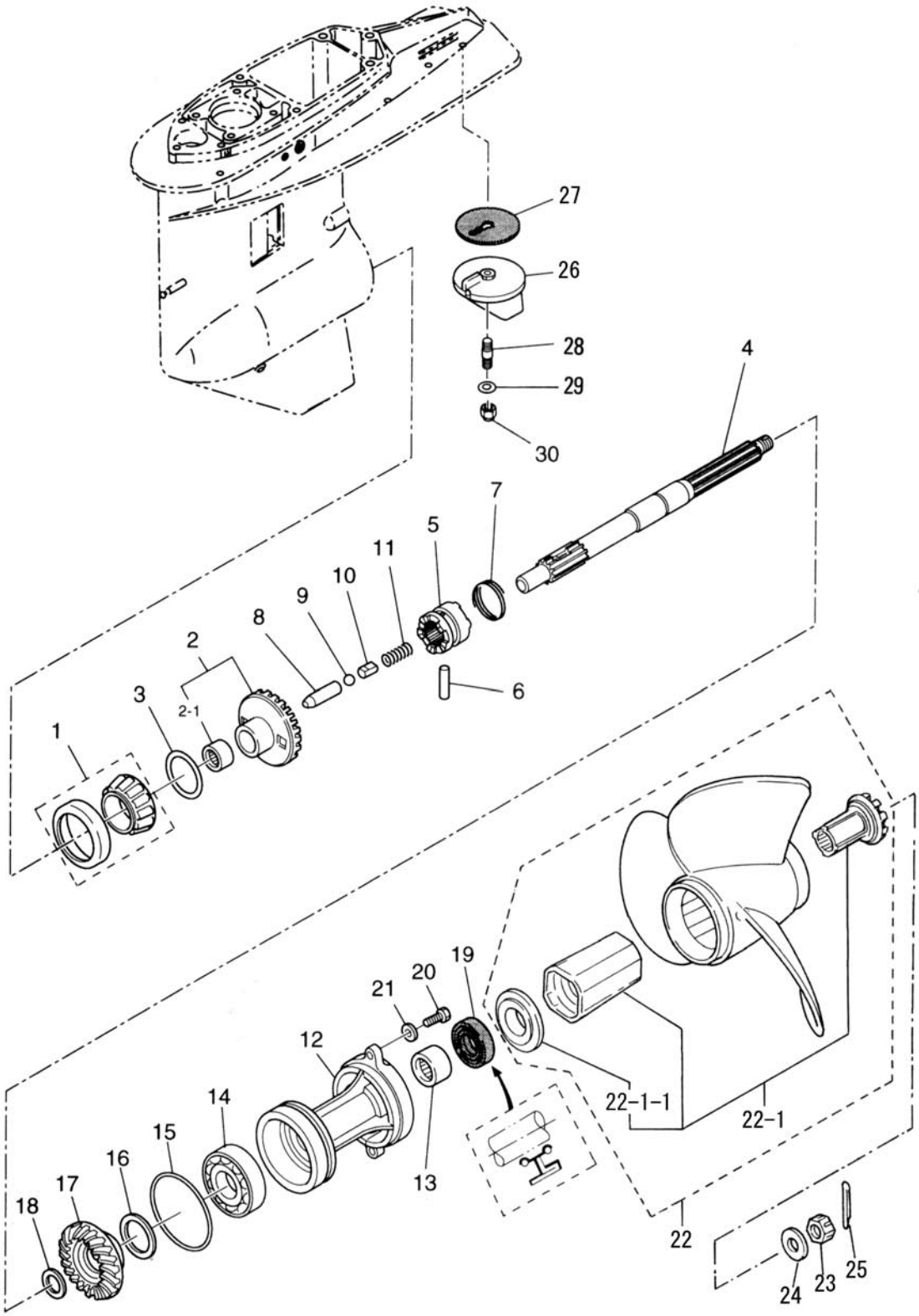

見出番号 Ref. No.	部品番号 Part No.	部　品　名 Description	個数 Q'ty D 90 B	個数 Q'ty D 70 B	備　考 Remarks
15-22	3N4W64532-1	ﾌﾟﾛﾍﾟﾗ M-15 (3×349×381) Propeller M-15 (3×13.75×15.0)	1	1	STD.
	3N4W64534-1	ﾌﾟﾛﾍﾟﾗ M-16 (3×336×406) Propeller M-16 (3×13.25×16.0)	1	1	
	3N4W64536-1	ﾌﾟﾛﾍﾟﾗ M-17 (3×336×432) Propeller M-17 (3×13.25×17.0)	1	1	
	3N4W64541-1	ﾌﾟﾛﾍﾟﾗ M-19 (3×330×483) Propeller M-19 (3×13.0×19.0)	1	1	
	3N4W64545-1	ﾌﾟﾛﾍﾟﾗ M-21 (3×324×533) Propeller M-21 (3×12.75×21.0)	1	1	
15-22-1	3Y9-64238-0	ﾌﾟﾛﾍﾟﾗﾊﾌﾞｷｯﾄ * Propeller Hub Kit	1	1	
15-22-1-1	3E0-64235-0	ﾌｫﾜｰﾄﾞｽﾗｽﾄﾜｯｼｬ ** Forward Thrust Washer	1	1	
15-23	353-64121-0	ﾌﾟﾛﾍﾟﾗﾅｯﾄ Propeller Nut	1	1	
15-24	345-64124-0	ﾜｯｼｬ、17-32-3 Washer, 17-32-3	1	1	
15-25	951503-0325	ｽﾌﾟﾘｯﾄﾋﾟﾝ、3-25 Split Pin, 3-25	1	1	
15-26	3B7-60217-1	ﾄﾘﾑﾀﾌﾞ Trim Tab	1	1	
15-27	3B7-60219-0	ﾄﾘﾑﾀﾌﾞｶﾞｽｹｯﾄ Trim Tab Gasket	1	1	
15-28	915313-0825	ｽﾀｯﾄﾞﾎﾞﾙﾄ Stud Bolt	1	1	
15-29	940113-0800	ﾜｯｼｬ Washer	1	1	
15-30	930403-0800	ﾅｲﾛﾝﾅｯﾄ、8-P1.25 Nylon Nut, 8-P1.25	1	1	

シフト
Fig.16 SHIFT

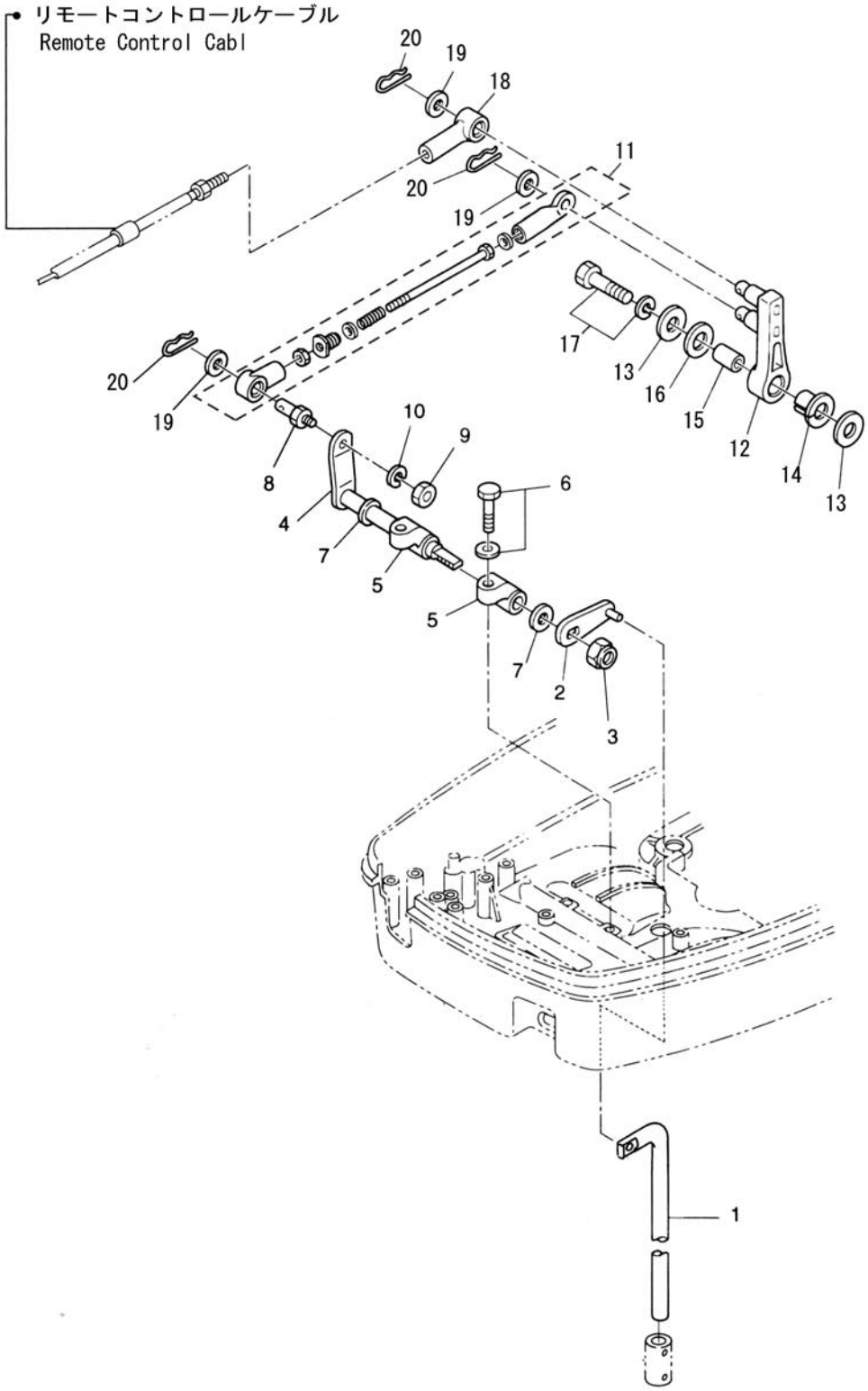

見出番号 Ref. No.	部品番号 Part No.	部　品　名 Description	個数 Q'ty D 90 B	個数 Q'ty D 70 B	備　考 Remarks
16-1	3T9-66215-0	ｼﾌﾄﾛｯﾄﾞ Shift Rod	1	1	
16-2	3T9-66110-0	ｼﾌﾄﾛｯﾄﾞﾚﾊﾞｰ Shift Rod Lever	1	1	
16-3	930403-1000	ﾅｲﾛﾝﾅｯﾄ、10-P1.5 Nylon Nut, 10-P1.5	1	1	
16-4	3T9-66225-0	ｼﾌﾄﾚﾊﾞｰｼｬﾌﾄ Shift Lever Shaft	1	1	
16-5	353-66145-1	ｼﾌﾄﾚﾊﾞｰｼｬﾌﾄﾎﾙﾀﾞ Shift Lever Shaft Holder	2	2	
16-6	910103-5825	ﾎﾞﾙﾄ Bolt	2	2	or 910113-5825
16-7	332-61315-0	ﾜｯｼｬ、10.5-18-1.5 Washer, 10.5-18-1.5	2	2	
16-8	353-83728-1	ｹｰﾌﾞﾙﾋﾟﾝ Cable Pin	1	1	
16-9	930103-0600	ﾅｯﾄ Nut	1	1	or 930113-0600
16-10	941303-0600	ｽﾌﾟﾘﾝｸﾞﾜｯｼｬ Spring Washer	1	1	
16-11	3T9-66150-1	ｼﾌﾄｱｼｽﾄｱｯｼ Shift Assist Ass'y	1	1	
16-12	3B7-66122-0	ｼﾌﾄｱｰﾑ Shift Arm	1	1	
16-13	3B7-63730-0	ﾜｯｼｬ、8.5-24-1.5 Washer, 8.5-24-1.5	2	2	
16-14	3B7-63713-0	ﾌﾞｯｼﾝｸﾞ、12-14-15.5 Bushing, 12-14-15.5	1	1	
16-15	3B7-63732-0	ｶﾗｰ、8.4-12-17 Collar, 8.4-12-17	1	1	
16-16	3B7-63731-0	ﾜｯｼｬ、12.5-24-1 Washer, 12.5-24-1	1	1	
16-17	910103-6835	ﾎﾞﾙﾄ Bolt	1	1	
16-18	3B7-83715-1	ｹｰﾌﾞﾙｼﾞｮｲﾝﾄ Cable Joint	1	1	
16-19	3AA-83719-0	ﾜｯｼｬ、8.5-18-1.6 Washer, 8.5-18-1.6	3	3	or 353-83719-0
16-20	951603-0800	ｽﾅｯﾌﾟﾋﾟﾝ、d=8 Snap Pin, d=8	3	3	

ﾌﾞﾗｹｯﾄ
Fig.17 BRACKET

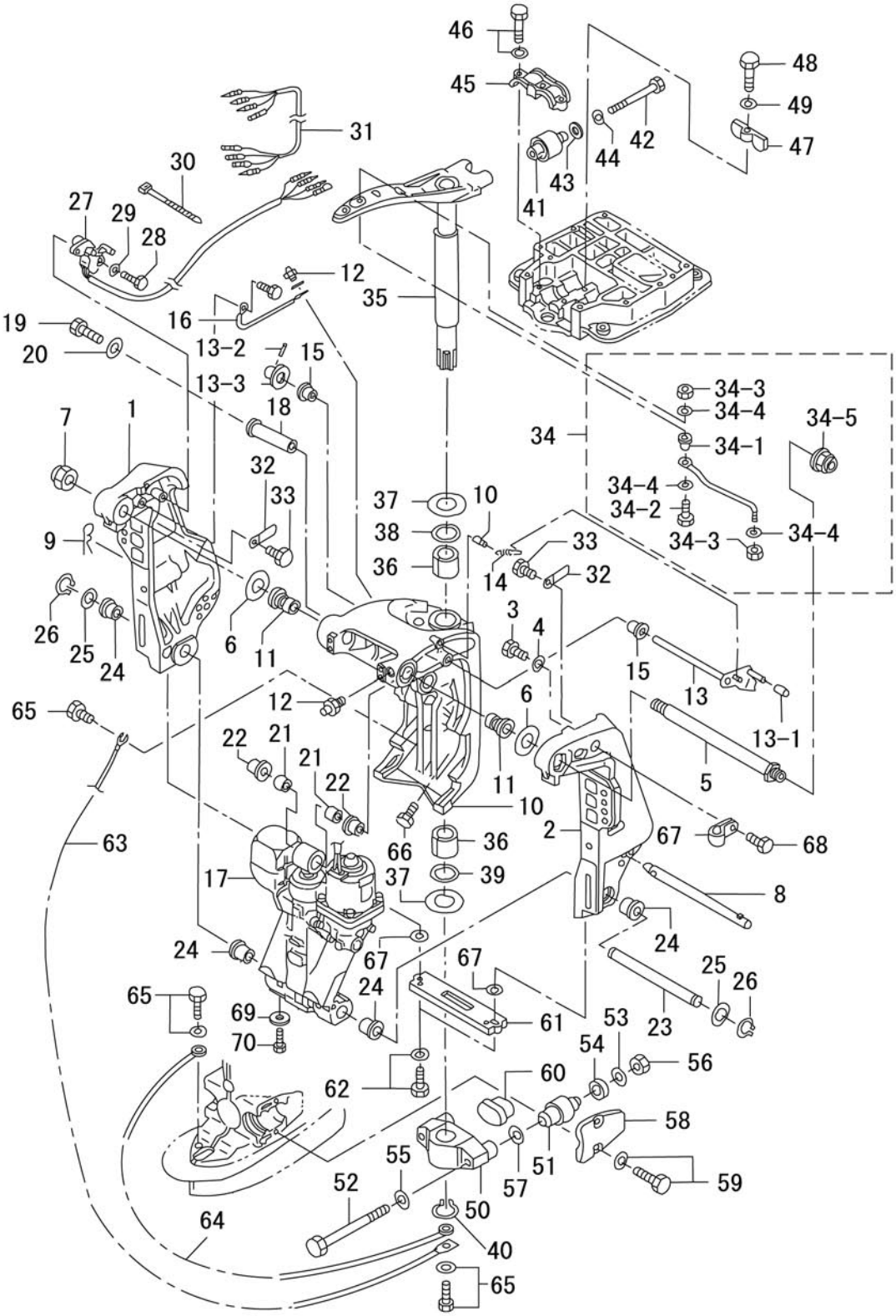

見出番号 Ref. No.	部品番号 Part No.	部　品　名 Description	個数 Q'ty D 90 B	個数 Q'ty D 70 B	備　考 Remarks
17-1	3E0Q62112-0	ｸﾗﾝﾌﾟﾌﾞﾗｹｯﾄ (ﾗｲﾄ) Clamp Bracket (Right)	1	1	Stern Bracket (Right) Starboard
17-2	3E0Q62113-1	ｸﾗﾝﾌﾟﾌﾞﾗｹｯﾄ (ﾚﾌﾄ) Clamp Bracket (Left)	1	1	Stern Bracket (Left) Port
17-3	910213-1020	ﾎﾞﾙﾄ Bolt	1	1	
17-4	940213-1000	ﾜｯｼｬ Washer	1	1	
17-5	3E0-62191-1	ｽｲﾍﾞﾙﾌﾞﾗｹｯﾄｼｬﾌﾄ Swivel Bracket Shaft	1	1	ﾌﾞﾗｹｯﾄﾎﾞﾙﾄ Bracket Bolt
17-6	3E0-62116-1	ﾜｯｼｬ、25.7-50-1 Washer, 25.7-50-1	2	2	
17-7	346-62124-1	ﾅｲﾛﾝﾅｯﾄ、7/8 Nylon Nut, 7/8	1	1	
17-8	3E0-62121-1	ｽﾗｽﾄﾛｯﾄﾞ Thrust Rod	1	1	
17-9	3B7-62129-1	ｽﾗｽﾄﾛｯﾄﾞﾋﾟﾝ Thrust Rod Pin	1	1	
17-10	3E0Q62313-0	ｽｲﾍﾞﾙﾌﾞﾗｹｯﾄ Swivel Bracket	1	1	
17-11	3E0-62126-0	ﾌﾞｯｼﾝｸﾞ、25.6-28.6-40 Bushing, 25.6-28.6-40	2	2	
17-12	344-67177-0	ｸﾞﾘｽﾆｯﾌﾟﾙ Grease Fitting	5	5	
17-13	3Y9-62431-0	ﾁﾙﾄｽﾄｯﾊﾟ Tilt Stopper	1	1	
17-13-1	3Y9-62433-0	ﾁﾙﾄｽﾄｯﾊﾟｸﾞﾘｯﾌﾟ * Tilt Stopper Grip	1	1	
17-13-2	951403-3516	ｽﾌﾟﾘﾝｸﾞﾋﾟﾝ * Spring Pin	1	1	
17-13-3	332-61315-0	ﾜｯｼｬ、10.5-18-1.5 * Washer, 10.5-18-1.5	1	1	
17-14	3E0-62473-1	ﾁﾙﾄｽﾄｯﾊﾟｽﾌﾟﾘﾝｸﾞ Spring, Tilt Stopper	1	1	
17-15	353-63207-0	ｶﾗｰ、10.2-12-12 Collar, 10.2-12-12	2	2	
17-16	398-62396-1	ｱｰｽﾜｲﾔ Ground Cable	1	1	L=130
17-17	3T9-77150-1	ﾊﾟﾜｰﾄﾘﾑ & ﾁﾙﾄ Power Trim & Tilt	1	1	
17-18	3C8-77071-0	ｼﾘﾝﾀﾞﾋﾟﾝ (ｱｯﾊﾟ) Cylinder Pin (Upper)	1	1	
17-19	910113-0612	ﾎﾞﾙﾄ Bolt	1	1	
17-20	345-05122-0	ﾜｯｼｬ、6.5-23-1.5 Washer, 6.5-23-1.5	1	1	
17-21	3C8-77075-0	ﾌﾞｯｼﾝｸﾞ、18-24-19 Bushing, 18-24-19	2	2	
17-22	3E0-77076-0	ﾌﾞｯｼﾝｸﾞ、18-20-20.5 Bushing, 18-20-20.5	2	2	
17-23	3E0-77101-0	ｼﾘﾝﾀﾞﾋﾟﾝ (ﾛﾜ) Cylinder Pin (Lower)	1	1	
17-24	3E0-77103-0	ﾌﾞｯｼﾝｸﾞ、22-25.4-23.5 Bushing, 22-25.4-23.5	4	4	
17-25	346-62412-1	ﾜｯｼｬ、22.6-30-2 Washer, 22.6-30-2	2	2	
17-26	945103-2200	C ﾘﾝｸﾞ、d=22 C-Ring, d=22	2	2	
17-27	3F3-72574-1	ﾄﾘﾑｾﾝｻ Trim Sensor	1	1	L=1700

ﾌﾞﾗｹｯﾄ
Fig.17 BRACKET

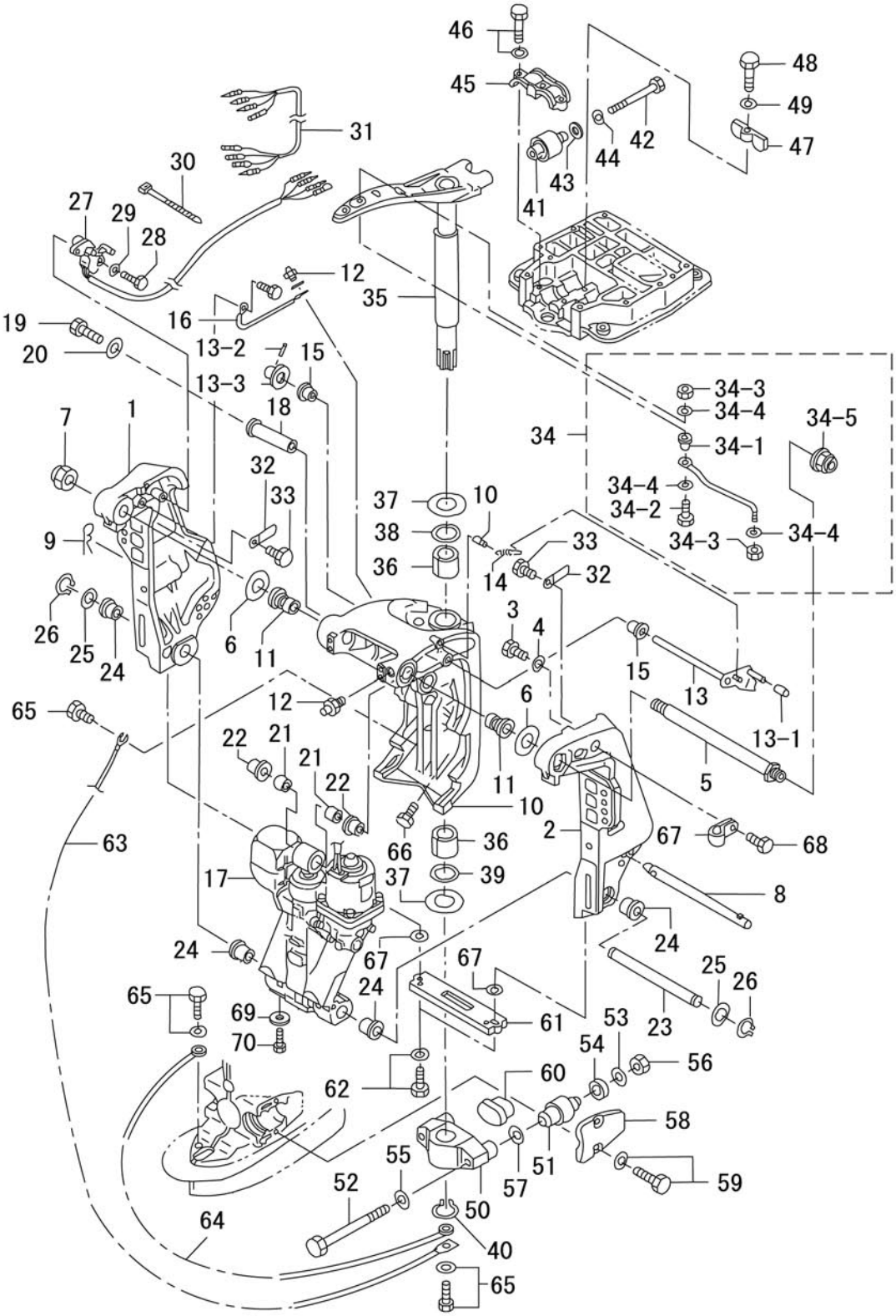

見出番号 Ref. No.	部品番号 Part No.	部　品　名 Description	個数 Q'ty D 90 B	個数 Q'ty D 70 B	備　考 Remarks
17-28	910113-0620	ﾎﾞﾙﾄ Bolt	2	2	
17-29	3R0-66308-0	ﾜｯｼｬ、6-16-1.5 Washer, 6-16-1.5	2	2	
17-30	3T5-84398-0	ﾘｰﾄﾞﾜｲﾔﾊﾞﾝﾄﾞ、104 Lead Wire Band, 104	2	2	
17-31	3F3-72573-1	ﾄﾘﾑｾﾝｻｴｸｽﾃﾝｼｮﾝｺｰﾄﾞ Trim Sensor Extension Cord	1	1	L=6000
17-32	309-06972-0	ｸﾗﾝﾌﾟ、6.5-47.5P Clamp, 6.5-47.5P	2	2	
17-33	910113-0612	ﾎﾞﾙﾄ Bolt	2	2	
17-34	3E0-84905-0	ﾄﾞﾗｯｸﾘﾝｸ H Drag Link “H”	1	1	
17-34-1	3E0-84914-0	ﾄﾞﾗｯｸﾘﾝｸｽﾍﾟｰｻ ＊ Drag Link Spacer	1	1	
17-34-2	3E0-84917-0	ﾎﾞﾙﾄ、3/8-50 ＊ Bolt, 3/8-50	1	1	
17-34-3	353-84918-0	ﾅｲﾛﾝﾅｯﾄ、3/8 ＊ Nylon Nut, 3/8	2	2	
17-34-4	353-84916-0	ﾜｯｼｬ、9.6-18-2 ＊ Washer, 9.6-18-2	3	3	
17-34-5	3F3-84908-0	ﾄﾞﾗｯｸﾘﾝｸｼｰﾙﾘﾝｸﾞ ＊ Drag Link Seal Ring	1	1	
17-35	3B7Q62010-1	ｽﾃｱﾘﾝｸﾞｼｬﾌﾄ Steering Shaft	1	1	
17-36	3B7-62417-0	ﾌﾞｯｼﾝｸﾞ、32-40-45 Bushing, 32-40-45	2	2	
17-37	3B7-62423-1	ｽﾗｽﾄﾌﾟﾚｰﾄ Thrust Plate	2	2	
17-38	3B7-62414-0	ｽﾃｱﾘﾝｸﾞｼｬﾌﾄｼｰﾙﾘﾝｸﾞ Steering Shaft Seal Ring	1	1	
17-39	3B7-62415-0	O ﾘﾝｸﾞ、 4.5-32 O-Ring, 4.5-32	1	1	
17-40	945103-3200	C ﾘﾝｸﾞ、d=32 C-Ring, d=32	1	1	
17-41	3B7-61301-0	ﾗﾊﾞｰﾏｳﾝﾄ (ｱｯﾊﾟ) Rubber Mount (Upper)	2	2	
17-42	3B7-61307-1	ﾗﾊﾞｰﾏｳﾝﾄﾎﾞﾙﾄ (ｱｯﾊﾟ) Rubber Mount Bolt (Upper)	2	2	
17-43	3C7-61338-0	ﾀﾞﾝﾊﾟ、21-36-5 Damper, 21-36-5	2	2	
17-44	3B7-61335-0	ﾜｯｼｬ、11.5-32-3 Washer, 11.5-32-3	2	2	
17-45	3B7Q61341-1	ﾏｳﾝﾄﾎｰﾙﾃﾞｨﾝｸﾞﾌﾟﾚｰﾄ (ｱｯﾊﾟ) Mount Holding Plate (Upper)	1	1	ﾗﾊﾞｰﾏｳﾝﾄｷｬｯﾌﾟ (ｱｯﾊﾟ) Rubber Mount Cap (Upper)
17-46	910113-5835	ﾎﾞﾙﾄ Bolt	3	3	
17-47	3B7-61339-0	ﾀﾞﾝﾊﾟ (ｱｯﾊﾟ) Damper (Upper)	1	1	
17-48	910113-0625	ﾎﾞﾙﾄ Bolt	1	1	
17-49	3R0-66308-0	ﾜｯｼｬ、6-16-1.5 Washer, 6-16-1.5	1	1	
17-50	3B7Q61411-2	ﾏｳﾝﾄﾌﾞﾗｹｯﾄ Mount Bracket	1	1	
17-51	353-61302-1	ﾗﾊﾞｰﾏｳﾝﾄ (ﾛﾜ) Rubber Mount (Lower)	2	2	
17-52	353-61321-3	ﾗﾊﾞｰﾏｳﾝﾄﾎﾞﾙﾄ (ﾛﾜ) Rubber Mount Bolt (Lower)	2	2	

ﾌﾞﾗｹｯﾄ
Fig.17 BRACKET

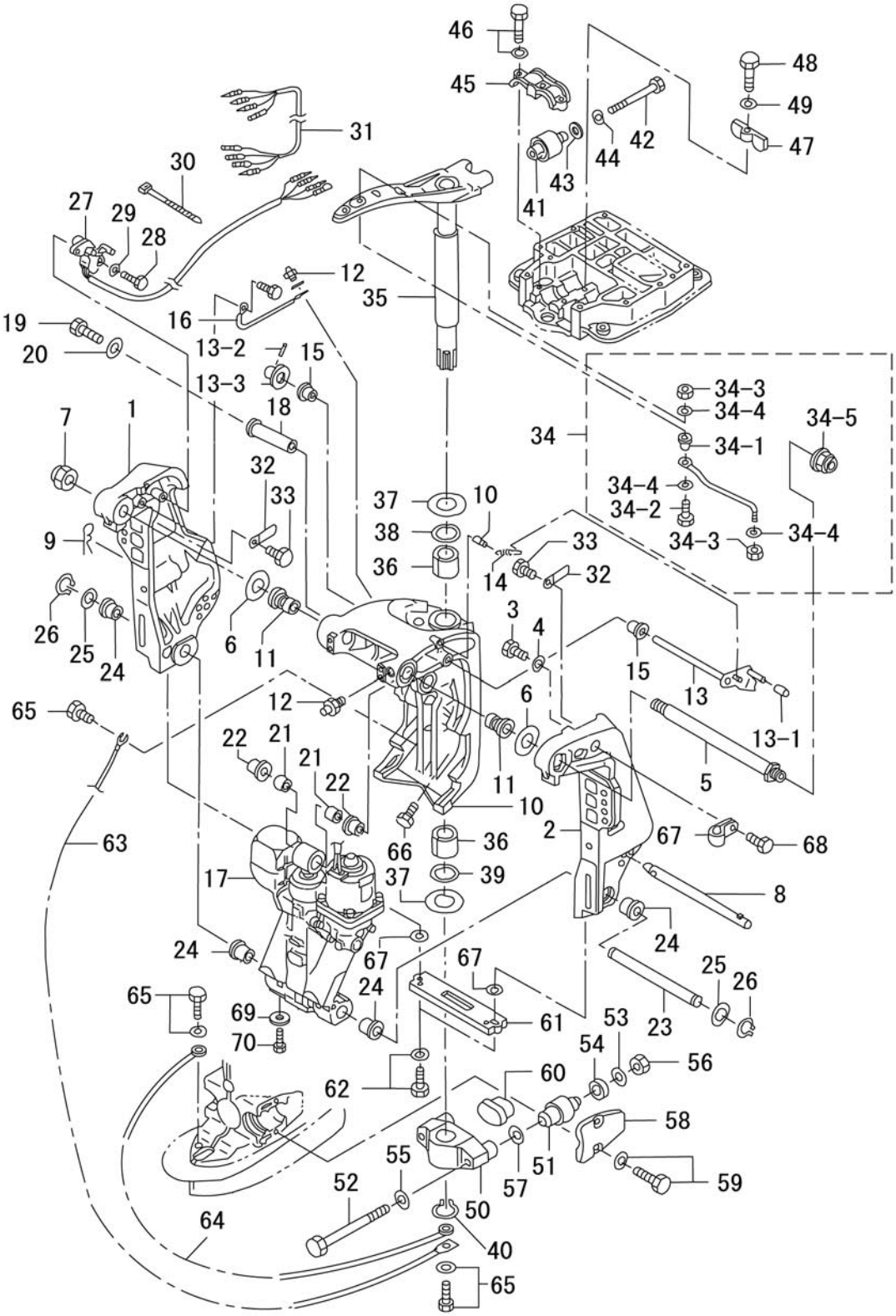

見出番号 Ref. No.	部品番号 Part No.	部　品　名 Description	個数 Q'ty D 90 B	個数 Q'ty D 70 B	備　考 Remarks
17-53	353-61334-0	ﾜｯｼｬ、13-34-3 Washer, 13-34-3	2	2	
17-54	3C7-61338-0	ﾀﾞﾝﾊﾟ、21-36-5 Damper, 21-36-5	2	2	
17-55	353-61315-1	ﾜｯｼｬ、12.2-25-2 Washer, 12.2-25-2	2	2	
17-56	3B7-61324-0	ﾅｯﾄ、12-P1.5 Nut, 12-P1.5	2	2	
17-57	940213-1200	ﾜｯｼｬ Washer	2	2	
17-58	3B7Q61342-0	ﾏｳﾝﾄﾎｰﾙﾃﾞｨﾝｸﾞﾌﾟﾚｰﾄ (ﾛﾜ) Mount Holding Plate (Lower)	2	2	ﾗﾊﾞｰﾏｳﾝﾄｷｬｯﾌﾟ (ﾛﾜ) Rubber Mount Cap (Lower)
17-59	3N4-61343-0	ﾎﾞﾙﾄ、8-25 Bolt, 8-25	4	4	
17-60	353-61336-0	ﾀﾞﾝﾊﾟ (ﾛﾜ) Damper (Lower)	1	1	
17-61	3C7-60218-2	ｱﾉｰﾄﾞ Anode	1	1	
17-62	910103-6630	ﾎﾞﾙﾄ Bolt	2	2	
17-63	3C8-62396-1	ｱｰｽﾜｲﾔ Ground Cable	1	1	L=210
17-64	3A3-62396-1	ｱｰｽﾜｲﾔ Ground Cable	1	1	L=110
17-65	910103-5612	ﾎﾞﾙﾄ Bolt	3	3	
17-66	3B7-77085-1	ﾎﾞﾙﾄ、12-20 P-1.75 Bolt, 12-20 P-1.75	2	2	
17-67	345-06915-0	ｸﾗﾝﾌﾟ、6.5-14L Clamp, 6.5-14L	1	1	
17-68	921503-5612	ｽｸﾘｭ Screw	1	1	
17-69	369-60218-1	ｱﾉｰﾄﾞ Anode	1	1	PTT
17-70	910103-5616	ﾎﾞﾙﾄ Bolt	1	1	

パワートリム & チルト
Fig.18 POWER TRIM & TILT

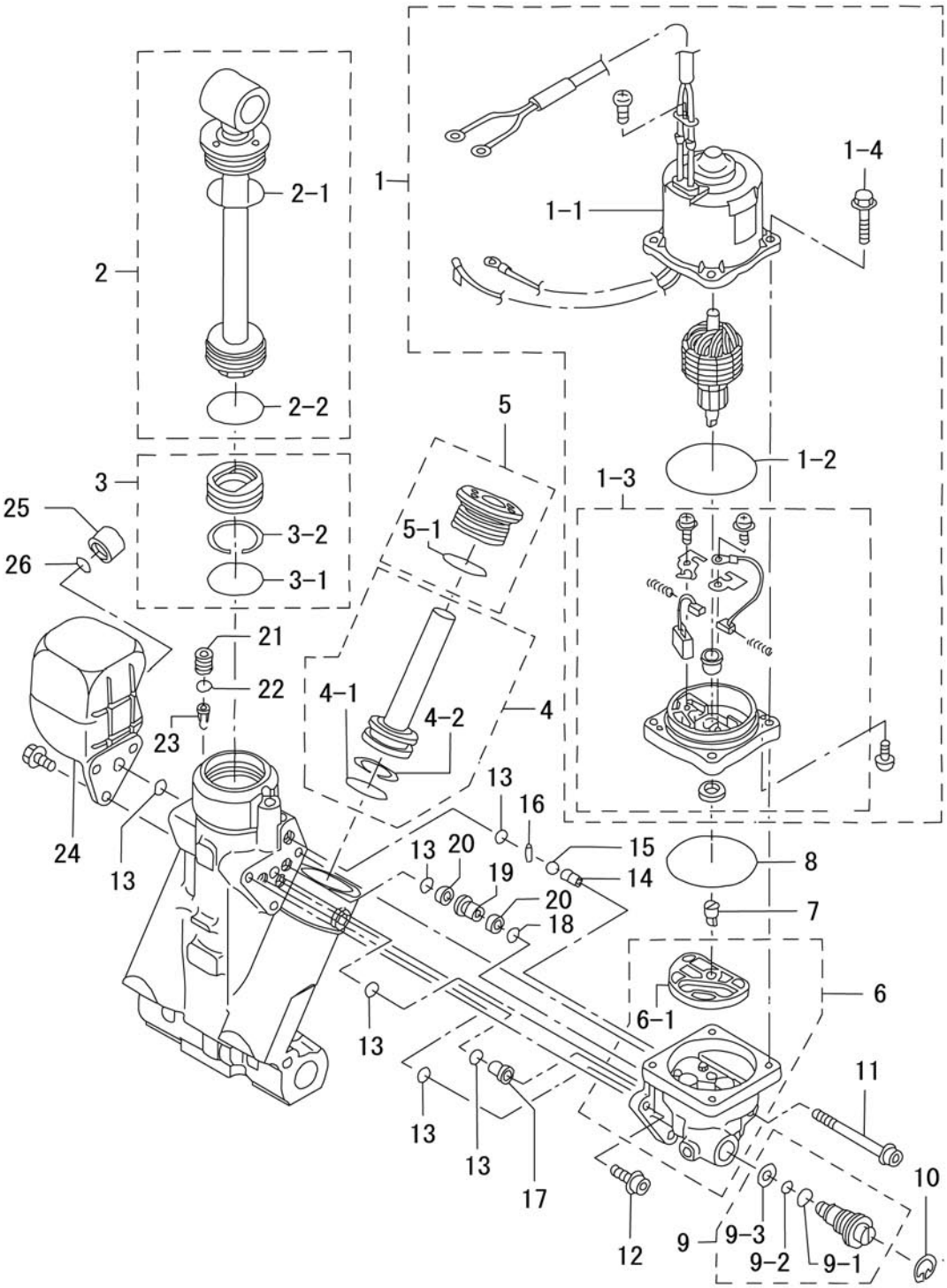

見出番号 Ref. No.	部品番号 Part No.	部　品　名 Description	個数 Q'ty D 90 B	個数 Q'ty D 70 B	備　考 Remarks
18-1	3T9-77180-0	ﾓｰﾀ Motor	1	1	
18-1-1	3T9-77195-0	ﾖｰｸｱｯｼ ＊ Yoke Ass'y	1	1	
18-1-2	353-77182-1	ﾓｰﾀ O ﾘﾝｸﾞ ＊ Motor O-Ring	1	1	
18-1-3	3E0-77192-0	ﾓｰﾀﾌﾞﾗｹｯﾄ ＊ Motor Bracket	1	1	
18-1-4	3E0-77199-0	ﾎﾞﾙﾄ ＊ Bolt	4	4	
18-2	3E0-77365-1	ﾋﾟｽﾄﾝﾛｯﾄﾞｱｯｼ (ﾁﾙﾄ) Piston Rod Ass'y (Tilt)	1	1	
18-2-1	3E0-77383-0	O ﾘﾝｸﾞ ＊ O-Ring	1	1	
18-2-2	3B7-77375-0	O ﾘﾝｸﾞ ＊ O-Ring	1	1	
18-3	3B7-77377-1	ﾌﾘｰﾋﾟｽﾄﾝ Free Piston	1	1	
18-3-1	3B7-77375-0	O ﾘﾝｸﾞ ＊ O-Ring	1	1	
18-3-2	3B7-77376-0	ﾊﾞｯｸｱｯﾌﾟﾘﾝｸﾞ ＊ Back-UP Ring	1	1	
18-4	3E0-77390-0	ﾄﾘﾑﾋﾟｽﾄﾝ Trim Piston	2	2	
18-4-1	3B7-77392-0	O ﾘﾝｸﾞ ＊ O-Ring	2	2	
18-4-2	3B7-77393-0	ﾊﾞｯｸｱｯﾌﾟﾘﾝｸﾞ ＊ Back-UP Ring	2	2	
18-5	3E0-77395-0	ﾛｯﾄﾞｶﾞｲﾄﾞｻﾌﾞｱｯｼ (ﾄﾘﾑ) Rod Guide Sub Ass'y (Trim)	2	2	
18-5-1	3E0-77398-0	O ﾘﾝｸﾞ ＊ O-Ring	2	2	
18-6	3E0-77430-0	ﾎﾟﾝﾌﾟ Pump	1	1	
18-6-1	3E0-77434-0	ﾌｨﾙﾀ B ＊ Filter "B"	1	1	
18-7	3E0-77163-0	ﾎﾟﾝﾌﾟｶｯﾌﾟﾘﾝｸﾞ Pump Coupling	1	1	
18-8	3B7-77167-0	O ﾘﾝｸﾞ、1.8-69.6 O-Ring, 1.8-69.6	1	1	
18-9	3E0-77176-1	ﾏﾆｭｱﾙﾊﾞﾙﾌﾞ Manual Valve	1	1	
18-9-1	3B7-77411-0	O ﾘﾝｸﾞ ＊ O-Ring	1	1	
18-9-2	3E0-77407-0	ﾊﾟｯｷﾝ ＊ Packing	1	1	
18-9-3	3E0-77408-0	ﾊﾞｯｸｱｯﾌﾟﾘﾝｸﾞ ＊ Back-UP Ring	1	1	
18-10	945003-1800	C ﾘﾝｸﾞ C-Ring	1	1	
18-11	3E0-77431-0	ﾎﾞﾙﾄ Bolt	1	1	
18-12	3E0-77432-0	ﾎﾞﾙﾄ Bolt	2	2	
18-13	3E0-77167-0	O ﾘﾝｸﾞ O-Ring	6	6	
18-14	3E0-77557-0	ｵﾘﾌｨｽ Orifice	1	1	
18-15	3E0-77558-0	ﾎﾞｰﾙ Ball	1	1	

パワートリム & チルト
Fig.18 POWER TRIM & TILT

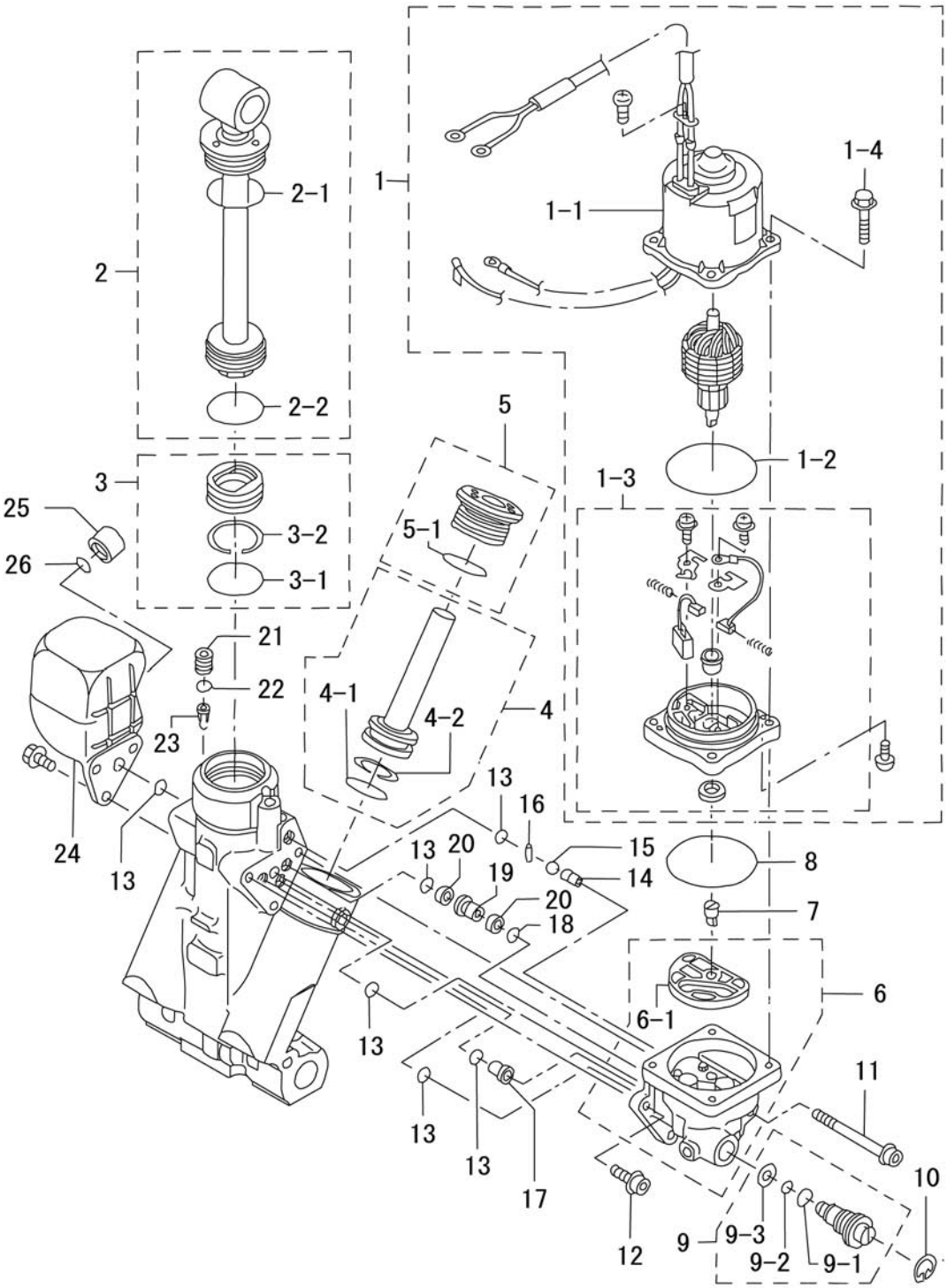

見出番号 Ref. No.	部品番号 Part No.	部　品　名 Description	個数 Q'ty D 90 B	個数 Q'ty D 70 B	備　考 Remarks
18-16	3E0-77559-0	ﾋﾟﾝ Pin	1	1	
18-17	3E0-77479-0	ｵﾘﾌｨｽ Orifice	1	1	
18-18	3B7-77169-0	O ﾘﾝｸﾞ O-Ring	1	1	
18-19	3E0-77453-0	ﾊﾞﾙﾌﾞｼｰﾄ Valve Seat	1	1	
18-20	3E0-77456-0	ﾌｨﾙﾀ Filter	2	2	
18-21	3E0-77472-0	ﾌﾟﾗｸﾞ Plug	1	1	
18-22	3B7-77179-0	O ﾘﾝｸﾞ O-Ring	1	1	
18-23	3E0-77475-0	ﾌｨﾙﾀ Filter	1	1	
18-24	3E0-77165-0	ﾘｻﾞｰﾌﾞﾀﾝｸ Reservoir Tank	1	1	
18-25	3E0-77168-0	ｷｬｯﾌﾟ Cap	1	1	
18-26	3E0-77169-0	O ﾘﾝｸﾞ O-Ring	1	1	

ﾎﾞﾄﾑｶｳﾙ（ﾓｰﾀｰｶﾊﾞｰﾛﾜ）

Fig.19 BOTTOM COWL (MOTOR COVER LOWER)

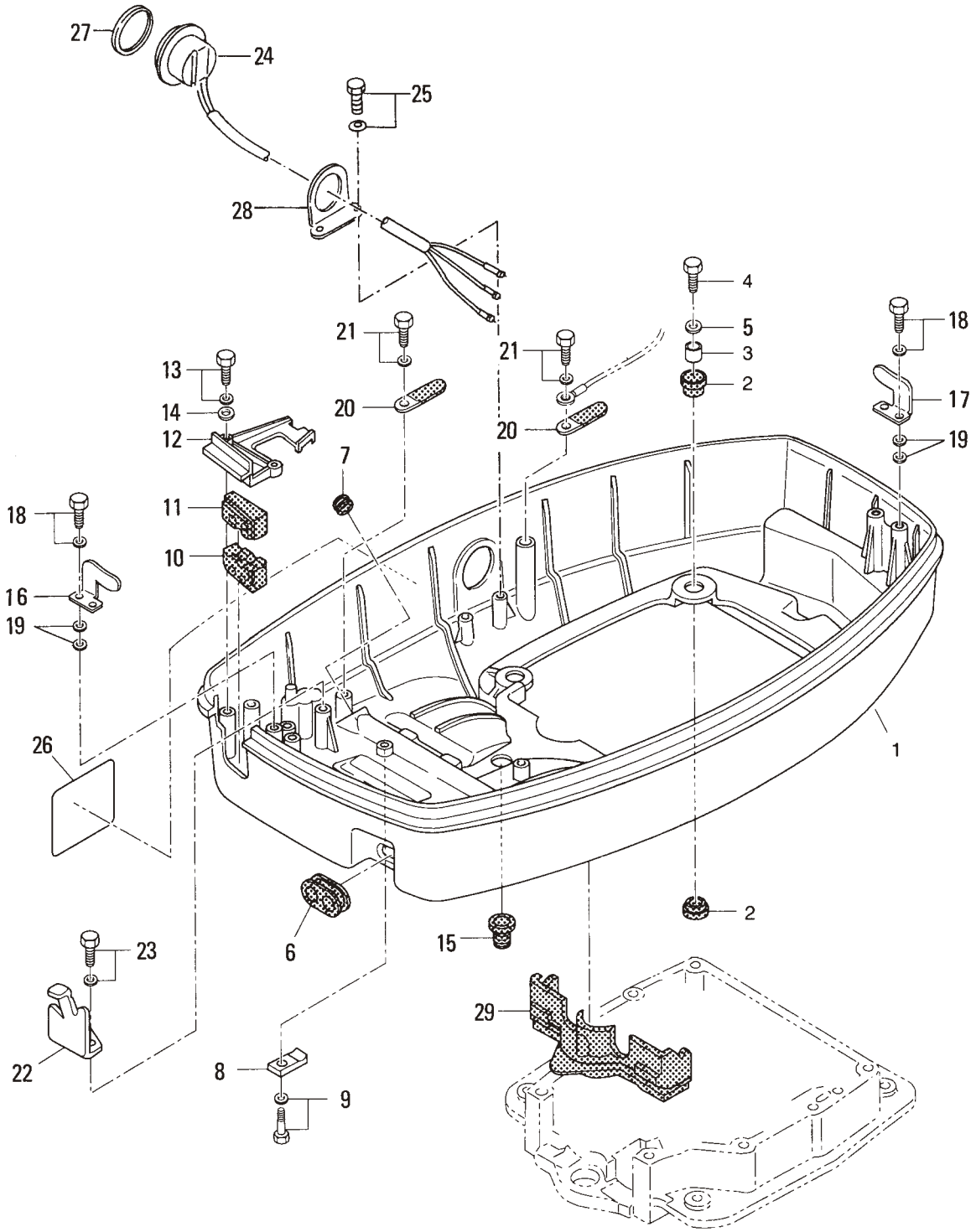

見出番号 Ref. No.	部品番号 Part No.	部　品　名 Description	個数 Q'ty D 90 B	個数 Q'ty D 70 B	備　考 Remarks
19-1	3C7Q67100-1	ﾎﾞﾄﾑｶｳﾙ Bottom Cowl	1	1	ﾓｰﾀｶﾊﾞｰ (ﾛﾜ) Motor Cover (Lower)
19-2	345-67113-0	ﾗﾊﾞｰﾏｳﾝﾄ、12-18-2.5 Rubber Mount, 12-18-2.5	8	8	
19-3	3C7-67114-0	ｽﾍﾟｰｻ、8.4-12-17 Spacer, 8.4-12-17	4	4	
19-4	910113-0835	ﾎﾞﾙﾄ Bolt	4	4	
19-5	3B7-63730-0	ﾜｯｼｬ、8.5-24-1.5 Washer, 8.5-24-1.5	4	4	
19-6	3C7-67160-0	ｵｲﾙﾊﾟｲﾌﾟｸﾞﾛﾒｯﾄ Oil Pipe Grommet	1	1	
19-7	3C7-77156-0	ﾊﾟﾜｰﾄﾘﾑ & ﾁﾙﾄｺｰﾄﾞｸﾞﾛﾒｯﾄ Power Trim & Tilt Cord Grommet	1	1	
19-8	3C7-72577-0	ﾊﾟﾜｰﾄﾘﾑ & ﾁﾙﾄｺｰﾄﾞｸﾗﾝﾌﾟ Power Trim & Tilt Cord Clamp	1	1	
19-9	910113-5616	ﾎﾞﾙﾄ Bolt	1	1	
19-10	3C7-76116-0	ｸﾞﾛﾒｯﾄ、ｺｰﾄﾞ Grommet, Cord	1	1	
19-11	3C7-83732-0	ﾘﾓｰﾄｺﾝﾄﾛｰﾙｹｰﾌﾞﾙｸﾞﾛﾒｯﾄ Remote Control Cable Grommet	1	1	
19-12	3T9Q76118-0	ｺｰﾄﾞｸﾗﾝﾌﾟ Cord Clamp	1	1	
19-13	910103-6625	ﾎﾞﾙﾄ Bolt	2	2	
19-14	940113-0600	ﾜｯｼｬ Washer	2	2	
19-15	345-66226-0	ｸﾞﾛﾒｯﾄ、17-3 Grommet, 17-3	1	1	
19-16	353-67512-0	ｶﾊﾞｰｽﾃｰ (ﾌﾛﾝﾄ) Cover Stay (Front)	1	1	
19-17	353-67513-0	ｶﾊﾞｰｽﾃｰ (ﾘｱ) Cover Stay (Rear)	1	1	
19-18	910103-6618	ﾎﾞﾙﾄ Bolt	4	4	
19-19	940113-0600	ﾜｯｼｬ Washer	8	8	
19-20	398-06972-0	ｸﾗﾝﾌﾟ、6.5-67P Cramp, 6.5-67P	2	2	
19-21	910103-6612	ﾎﾞﾙﾄ Bolt	2	2	
19-22	3T9-83720-0	ｹｰﾌﾞﾙｸﾘｯﾌﾟ Cable Clip	1	1	
19-23	910103-6616	ﾎﾞﾙﾄ Bolt	2	2	
19-24	3E0-72615-0	ﾊﾟﾜｰﾄﾘﾑ & ﾁﾙﾄｽｲｯﾁ Power Trim & Tilt Switch	1	1	
19-25	910103-6614	ﾎﾞﾙﾄ Bolt	2	2	
19-26	3C7-72030-0	ｲﾝﾀﾌｪﾗﾝｽﾃﾞｶﾙ Interference Decal	1	1	
19-27	3F3-72616-1	ﾊﾟﾜｰﾄﾘﾑ & ﾁﾙﾄ ｽｲｯﾁｶﾞｽｹｯﾄ Power Trim & Tilt Switch Gasket	1	1	
19-28	3F3-72617-1	ﾊﾟﾜｰﾄﾘﾑ & ﾁﾙﾄ ｽｲｯﾁﾌﾞﾗｹｯﾄ Power Trim & Tilt Switch Bracket	1	1	
19-29	3C7-67164-0	ﾎﾞﾄﾑｶｳﾙｸﾞﾛﾒｯﾄ A Bottom Cowl Grommet “A”	1	1	

トップカウル（モーターカバーアッパ）
Fig.20 TOP COWL (MOTOR COVER UPPER)

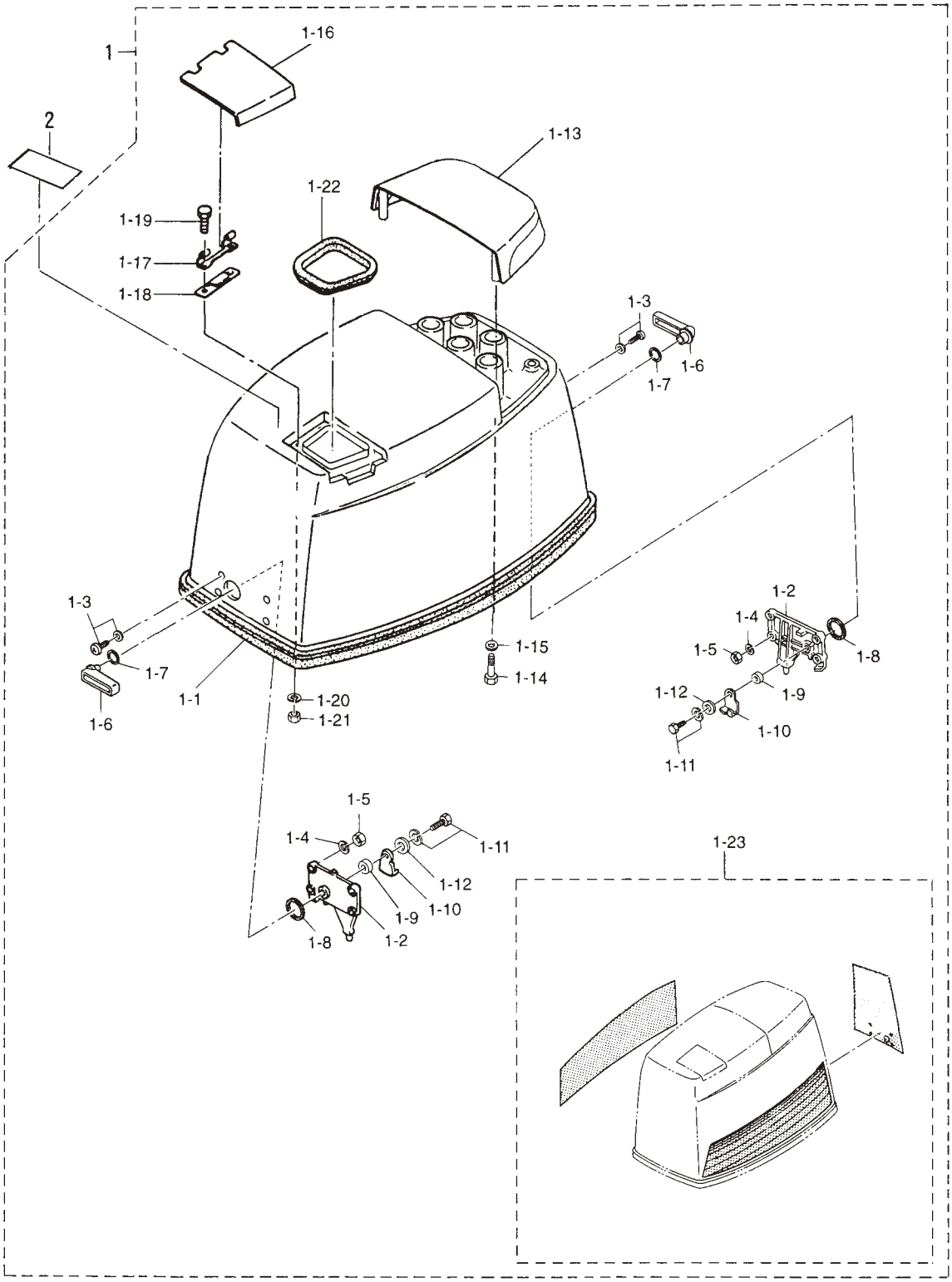

見出番号 Ref. No.	部品番号 Part No.	部　品　名 Description	個数 Q'ty D 90 B	個数 Q'ty D 70 B	備　考 Remarks
20-1	3T9Q67510-2	ﾄｯﾌﾟｶｳﾙ Top Cowl	1	1	Motor Cover (Upper) UNIQUE
20-1-1	3C7-67501-0	ﾄｯﾌﾟｶｳﾙｼｰﾙ * Top Cowl Seal	1	1	
20-1-2	353-67517-1	ﾛｹｰﾃｨﾝｸﾞﾌﾞﾗｹｯﾄ * Locating Bracket	2	2	
20-1-3	921703-5520	ｽｸﾘｭ * Screw	8	8	
20-1-4	941303-0500	ｽﾌﾟﾘﾝｸﾞﾜｯｼｬ * Spring Washer	8	8	
20-1-5	930111-0500	ﾅｯﾄ * Nut	8	8	
20-1-6	353Q67141-0	ﾌｯｸﾚﾊﾞｰ * Hook Lever	2	2	
20-1-7	338-62435-0	O ﾘﾝｸﾞ、1.5-9.5 * O-Ring, 1.5-9.5	2	2	
20-1-8	353-67147-1	ｼｰﾙﾘﾝｸﾞ * Seal Ring	2	2	
20-1-9	353-67105-0	ﾌﾞｯｼﾝｸﾞ、12-14-12 * Bushing, 12-14-12	2	2	
20-1-10	353-67142-1	ｶﾊﾞｰﾌｯｸ * Cover Hook	2	2	
20-1-11	910103-6616	ﾎﾞﾙﾄ * Bolt	2	2	
20-1-12	3R0-66308-0	ﾜｯｼｬ、6-16-1.5 * Washer, 6-16-1.5	2	2	
20-1-13	3F3Q67521-1	ﾁﾙﾄﾊﾝﾄﾞﾙ * Tilt Handle	1	1	
20-1-14	910113-0630	ﾎﾞﾙﾄ * Bolt	4	4	
20-1-15	3R0-66308-0	ﾜｯｼｬ、6-16-1.5 * Washer, 6-16-1.5	4	4	
20-1-16	3E3Q67210-0	ﾌｨﾗﾘｯﾄﾞ * Filler Lid	1	1	
20-1-17	3B7-67211-0	ﾌｨﾗﾘｯﾄﾞﾋﾝｼﾞ * Filler Lid Hinge	1	1	
20-1-18	3C8-67212-0	ﾌｨﾗﾘｯﾄﾞｽﾌﾟﾘﾝｸﾞ * Filler Lid Spring	1	1	
20-1-19	910103-0614	ﾎﾞﾙﾄ * Bolt	2	2	
20-1-20	941303-0600	ｽﾌﾟﾘﾝｸﾞﾜｯｼｬ * Spring Washer	2	2	
20-1-21	930113-0600	ﾅｯﾄ * Nut	2	2	
20-1-22	3T9-67213-0	ﾌｨﾗﾘｯﾄﾞｼｰﾙ * Filler Lid Seal	1	1	
20-1-23	3Y9Q87802-0	ﾃﾞｶﾙｾｯﾄ * Decal Set	1 set	-	UNIQUE
	3Y7Q87802-0	ﾃﾞｶﾙｾｯﾄ * Decal Set	-	1 set	UNIQUE
20-2	3C7-72180-2	ｺｰｼｮﾝﾃﾞｶﾙA Caution Decal "A"	1	1	

セパレートフュエルタンク
Fig.21 SEPARATE FUEL TANK

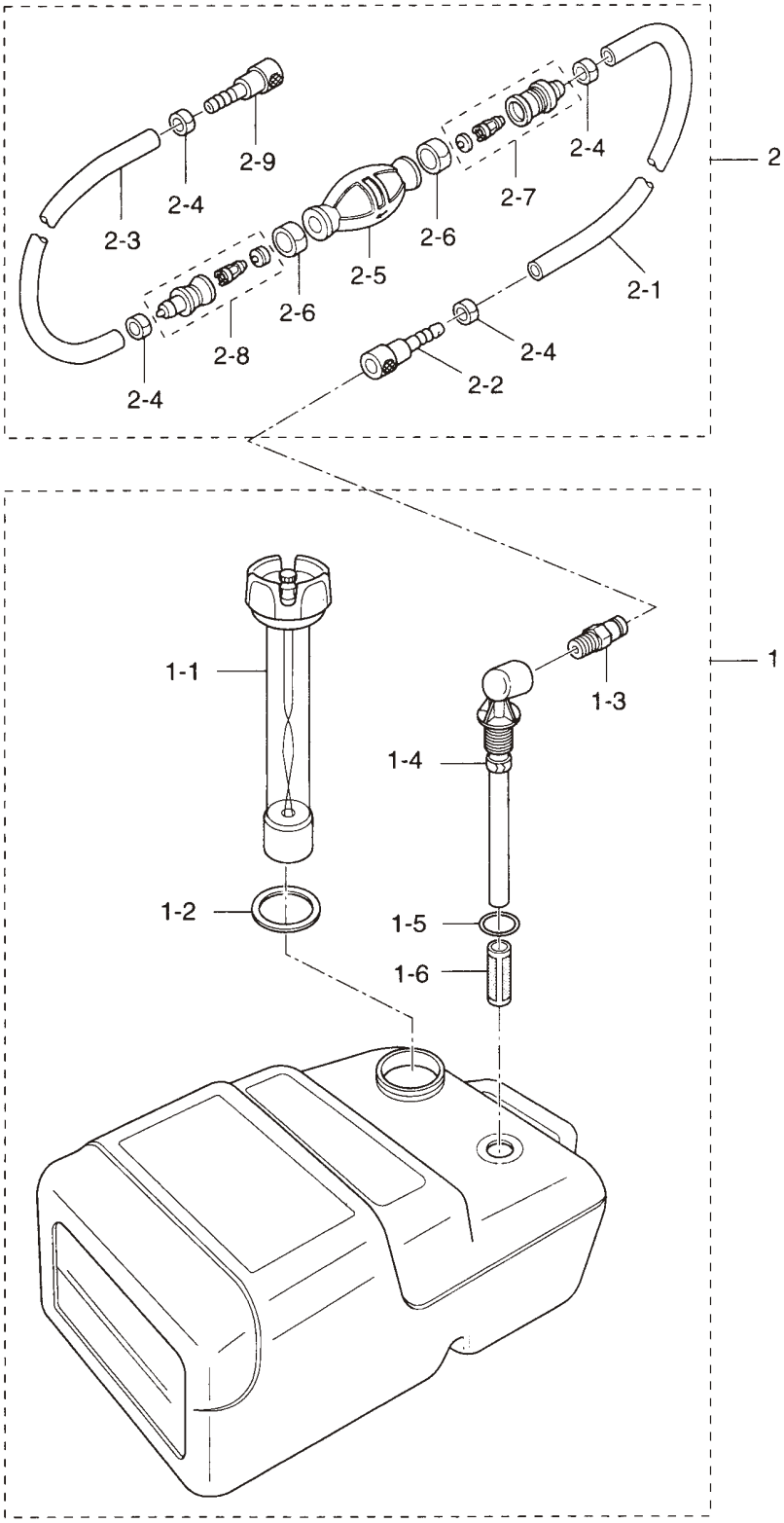

見出番号 Ref. No.	部品番号 Part No.	部　品　名 Description	個数 Q'ty D 90 B	個数 Q'ty D 70 B	備　考 Remarks
21-1	3C7-70177-0	ﾌｭｴﾙﾀﾝｸ (25L) Fuel Tank (25L)	1	1	UNIQUE
21-1-1	3C7-70050-0	ﾌｭｴﾙｹﾞｰｼﾞﾍﾞﾝﾃｨﾄﾞｷｬｯﾌﾟ * Fuel Gauge Vented Cap	1	1	
21-1-2	3C7-70021-0	ｷｬｯﾌﾟｶﾞｽｹｯﾄ * Cap Gasket	1	1	
21-1-3	3E0-70270-0	ﾒｲﾙｸｲｯｸｺﾈｸﾀ * Male Quick Connector	1	1	
21-1-4	3C7-70155-0	ﾌｭｴﾙﾋﾟｯｸｱｯﾌﾟｴﾙﾎﾞ * Elbow Tubing and Clamp	1	1	
21-1-5	3C7-70199-0	O ﾘﾝｸﾞ * O-Ring	1	1	
21-1-6	3C7-70113-0	ﾌｨﾙﾀ * Filter	1	1	
21-2	3B7-70200-3	ﾌﾟﾗｲﾏﾊﾞﾙﾌﾞｱｯｼ Primer Bulb Ass'y	1	1	
21-2-1	98AB-7-1600	ﾌｭｴﾙﾊﾟｲﾌﾟ A * Fuel Pipe "A"	1	1	
212-2-2	3B2-70281-0	ﾌｭｴﾙｺﾈｸﾀ (ﾀﾝｸ、ﾌｨﾒｰﾙ) * Fuel Connector (Tank Side, Female)	1	1	
21-2-3	98AB-7-0700	ﾌｭｴﾙﾊﾟｲﾌﾟ B * Fuel Pipe "B"	1	1	
21-2-4	332-70201-0	ｸﾗﾝﾌﾟ * Clamp	4	4	
21-2-5	3C7-70211-0	ﾌﾟﾗｲﾏﾊﾞﾙﾌﾞ * Primer Bulb	1	1	
21-2-6	3C7-70217-0	ｸﾗﾝﾌﾟ * Clamp	2	2	
21-2-7	3C7-70220-1	ｼﾞｮｲﾝﾄｱｯｼ (IN) * Joint Ass'y (Inlet)	1	1	
21-2-8	3C7-70224-1	ｼﾞｮｲﾝﾄｱｯｼ (OUT) * Joint Ass'y (Outlet)	1	1	
21-2-9	3B2-70250-1	ﾌｭｴﾙｺﾈｸﾀ (ｴﾝｼﾞﾝ、ﾌｨﾒｰﾙ) * Fuel Connector (Engine Side, Female)	1	1	

アクセサリー
Fig.22 ACCESSORIES

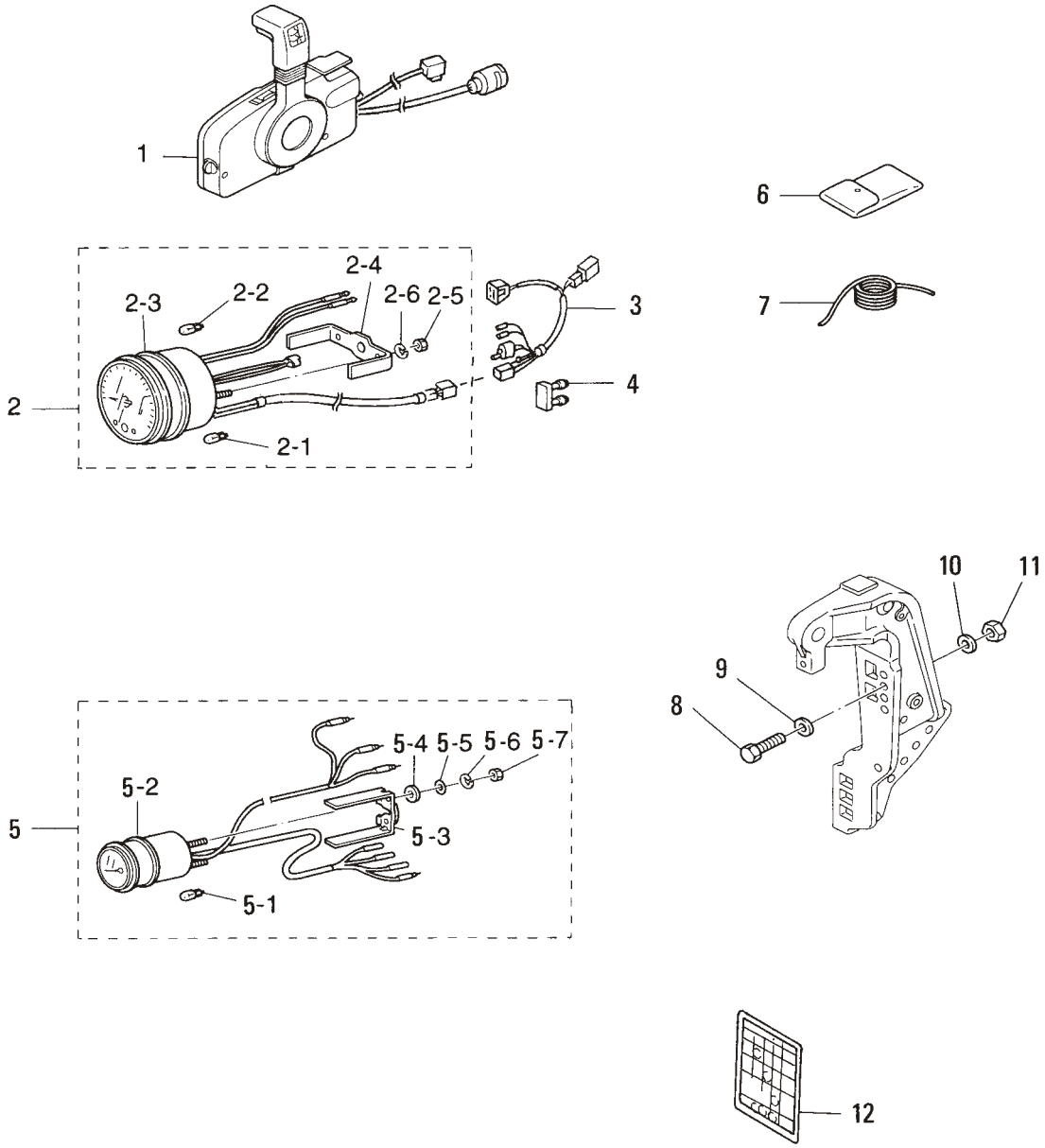

見出番号 Ref. No.	部品番号 Part No.	部　品　名 Description	個数 Q'ty D 90 B	個数 Q'ty D 70 B	備　考 Remarks
22-1	3T5Q84500-1	ﾘﾓｰﾄｺﾝﾄﾛｰﾙﾎﾞｯｸｽ（RC5F） Remote Control Box（RC5F）	1	1	UNIQUE
22-2	3Z5-72640-1	ﾀｺﾒｰﾀ Tachometer	1	1	
22-2-1	3B7-72658-0	ｵｲﾙﾊﾞﾙﾌﾞ、12V-1.7W ＊ Oil Bulb, 12V-1.7W	3	3	
22-2-2	3B7-72659-0	ﾒｰﾀﾊﾞﾙﾌﾞ、12V-1.7W ＊ Meter Bulb, 12V-1.7W	1	1	
22-2-3	3B7-72656-0	ﾒｰﾀﾀﾞﾝﾊﾟ ＊ Meter Damper	1	1	
22-2-4	3B7-72661-0	ﾌｨﾃﾝｸﾞﾌﾟﾚｰﾄ ＊ Fitting Plate	1	1	
22-2-5	930203-0500	ﾅｯﾄ ＊ Nut	2	2	
22-2-6	941303-0500	ｽﾌﾟﾘﾝｸﾞﾜｯｼｬ ＊ Spring Washer	2	2	
22-3	3T5-72537-0	ﾒｰﾀﾘｰﾄﾞﾜｲﾔ Meter Lead Wire	1	1	L=8000
22-4	353-76037-0	ｹｰﾌﾞﾙﾀｰﾐﾅﾙﾌﾟﾗｸﾞ Cable Terminal Plug	1	1	
22-5	3E0-72571-0	ﾄﾘﾑﾒｰﾀ Trim Meter	1	1	
22-5-1	3B7-72659-0	ﾒｰﾀﾊﾞﾙﾌﾞ、12V-1.7W ＊ Meter Bulb, 12V-1.7W	1	1	
22-5-2	3B7-72655-0	ﾒｰﾀﾀﾞﾝﾊﾟ ＊ Meter Damper	1	1	
22-5-3	3B7-72665-0	ﾌﾟﾚｰﾄﾌｨﾃﾝｸﾞ ＊ Plate, Fitting	1	1	
22-5-4	3B7-72666-0	ｲﾝｼｭﾚｰﾃｯﾄﾞﾜｯｼｬ ＊ Insulated Washer	2	2	
22-5-5	940103-0400	ﾜｯｼｬ ＊ Washer	2	2	
22-5-6	941303-0400	ｽﾌﾟﾘﾝｸﾞﾜｯｼｬ ＊ Spring Washer	2	2	
22-5-7	930203-0400	ﾅｯﾄ ＊ Nut	2	2	
22-6	3H6-72100-0	ﾂｰﾙｱｯｼ Tool Ass'y	1	1	
22-7	3B7-72201-0	ﾛｰﾌﾟ、6-1600 Rope, 6-1600	1	1	
22-8	3C7-62133-2	ﾎﾞﾙﾄ、12-P1.25 Bolt, 12-P1.25	4	4	L=105
22-9	353-61334-0	ﾜｯｼｬ、13-34-3 Washer, 13-34-3	4	4	
22-10	940103-1200	ﾜｯｼｬ Washer	4	4	or 940113-1200
22-11	3C7-62139-1	ﾅｯﾄ、12-P1.25 Nut, 12-P1.25	4	4	
22-12	3T5-72050-0	ﾜｰﾆﾝｸﾞﾌﾞｻﾞｰｺｰｼｮﾝﾃﾞｶﾙ Warning Buzzer Caution Decal	1	1	

オプショナルパーツ (1)
Fig.23 OPTIONAL PARTS (1)

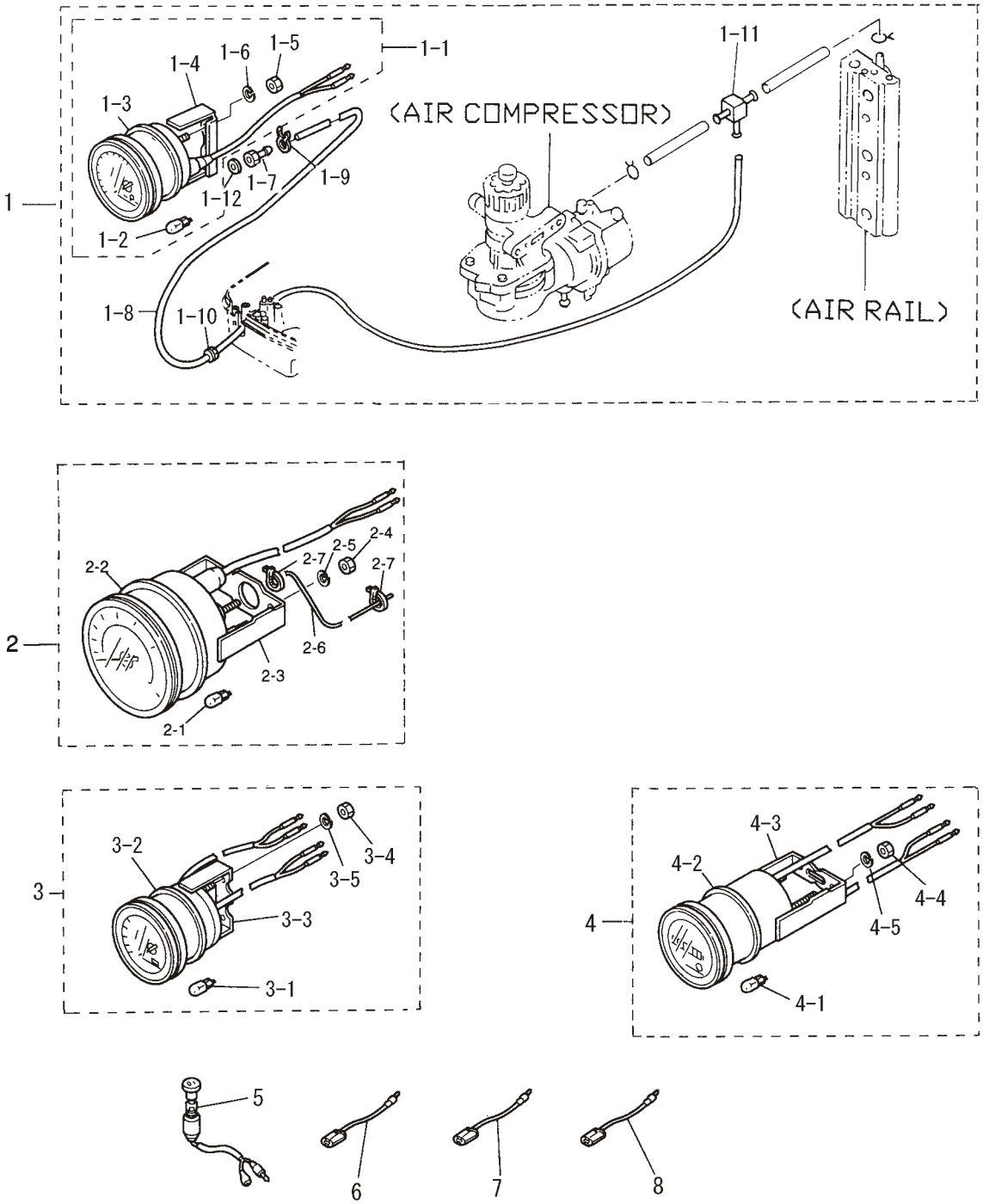

見出番号 Ref. No.	部品番号 Part No.	部　品　名 Description	個数 Q'ty D 90 B	個数 Q'ty D 70 B	備　考 Remarks
23-1	3E0-72527-0	ｳｫｰﾀﾌﾟﾚｯｼｬﾒｰﾀｷｯﾄ Water Pressure Meter Kit	1 set	1 set	
23-1-1	3E0-72598-0	ｳｫｰﾀﾌﾟﾚｯｼｬﾒｰﾀ * Water Pressure Meter	1	1	
23-1-2	3B7-72657-0	ﾒｰﾀﾊﾞﾙﾌﾞ、12V-1.7W * Meter Bulb, 12V-1.7W	1	1	
23-1-3	3B7-72655-0	ﾒｰﾀﾀﾞﾝﾊﾟ * Meter Damper	1	1	
23-1-4	3B7-72663-0	ﾌｨﾃﾝｸﾞﾌﾟﾚｰﾄ * Fitting Plate	1	1	
23-1-5	930203-0500	ﾅｯﾄ * Nut	2	2	
23-1-6	941303-0500	ｽﾌﾟﾘﾝｸﾞﾜｯｼｬ * Spring Washer	2	2	
23-1-7	3B7-72641-0	ｳｫｰﾀﾌﾟﾚｯｼｬﾒｰﾀﾆｯﾌﾟﾙ * Water Pressure Meter Nipple	1	1	
23-1-8	98AB-5-6000	ｺﾞﾑﾎｰｽ * Rubber Hose	1	1	
23-1-9	338-02215-0	ｸﾘｯﾌﾟ、φ10 * Clip, φ10	1	1	
23-1-10	345-67193-0	ｸﾞﾛﾒｯﾄ * Grommet	1	1	
23-1-11	394-70013-0	ﾊﾟｲﾌﾟｼﾞｮｲﾝﾄ * Pipe Joint	1	1	
23-1-12	121-33159-0	ｶﾞｽｹｯﾄ、2-8-1 * Gasket, 2-8-1	1	1	
23-2	3E0-72649-0	ｽﾋﾟｰﾄﾒｰﾀ 75MPH Speedometer 75MPH	1 set	1 set	
	3E0-72648-0	ｽﾋﾟｰﾄﾒｰﾀ 50MPH Speedometer 50MPH	1 set	1 set	
23-2-1	3B7-72659-0	ﾒｰﾀﾊﾞﾙﾌﾞ、12V-1.7W * Meter Bulb, 12V-1.7W	1	1	
23-2-2	3B7-72656-0	ﾒｰﾀﾀﾞﾝﾊﾟ * Meter Damper	1	1	
23-2-3	3B7-72661-0	ﾌｨﾃﾝｸﾞﾌﾟﾚｰﾄ * Fitting Plate	1	1	
23-2-4	930203-0500	ﾅｯﾄ * Nut	2	2	
23-2-5	941303-0500	ｽﾌﾟﾘﾝｸﾞﾜｯｼｬ * Spring Washer	2	2	
23-2-6	3B7-72650-0	ｽﾋﾟｰﾄﾞﾒｰﾀﾁｭｰﾌﾞ Speedometer Tube	1	1	
23-2-7	3B7-72651-0	ｽﾋﾟｰﾄﾞﾒｰﾀﾊﾞﾝﾄﾞ Speedometer Band	2	2	
23-3	3E0-72529-0	ﾎﾞﾙﾄﾒｰﾀ Voltmeter	1	1	
23-3-1	3B7-72657-0	ﾒｰﾀﾊﾞﾙﾌﾞ、12V-1.7W * Meter Bulb, 12V-1.7W	1	1	
23-3-2	3B7-72655-0	ﾒｰﾀﾀﾞﾝﾊﾟ * Meter Damper	1	1	
23-3-3	3B7-72662-0	ﾌｨﾃﾝｸﾞﾌﾟﾚｰﾄ * Fitting Plate	1	1	
23-3-4	930203-0400	ﾅｯﾄ * Nut	2	2	
23-3-5	941303-0400	ｽﾌﾟﾘﾝｸﾞﾜｯｼｬ * Spring Washer	2	2	
23-4	3E0-72524-0	ｱﾜﾒｰﾀ Hour-meter	1	1	
23-4-1	3B7-72657-0	ﾒｰﾀﾊﾞﾙﾌﾞ、12V-1.7W * Meter Bulb, 12V-1.7W	1	1	

オプショナルパーツ (1)
Fig.23 OPTIONAL PARTS (1)

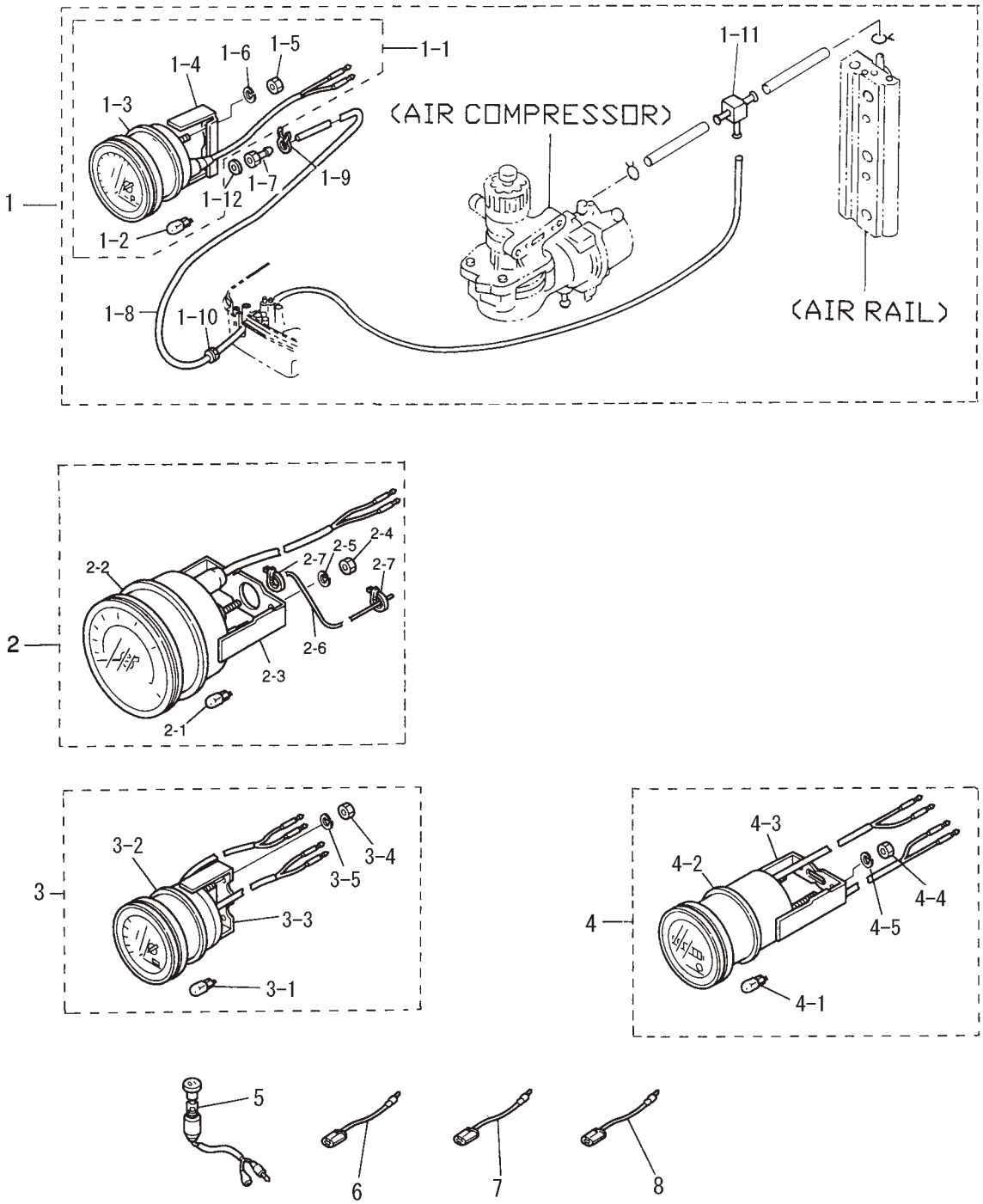

見出番号 Ref. No.	部品番号 Part No.	部　品　名 Description	個数 Q'ty D 90 B	個数 Q'ty D 70 B	備　考 Remarks
23-4-2	3B7-72655-0	ﾒｰﾀﾀﾞﾝﾊﾟ ＊ Meter Damper	1	1	
23-4-3	3B7-72664-0	ﾌﾟﾚｰﾄﾌｨﾃﾝｸﾞ ＊ Plate, Fitting	1	1	
23-4-4	930203-0400	ﾅｯﾄ ＊ Nut	2	2	
23-4-5	941303-0400	ｽﾌﾟﾘﾝｸﾞﾜｯｼｬ ＊ Spring Washer	2	2	
23-5	353-72521-1	ﾒｰﾀﾗﾝﾌﾟｽｲｯﾁ Meter Lamp Switch	1	1	
23-6	353-72546-0	ｱｼｽﾄｺｰﾄﾞ（ﾚｯﾄﾞ） Assist Cord (Red)	AR	AR	L=200
23-7	353-72547-0	ｱｼｽﾄｺｰﾄﾞ（ﾌﾞﾙｰ） Assist Cord (Blue)	AR	AR	L=200
23-8	353-72548-0	ｱｼｽﾄｺｰﾄﾞ（ﾌﾞﾗｯｸ） Assist Cord (Black)	AR	AR	L=200

オプショナルパーツ (2)
Fig.24 OPTIONAL PARTS (2)

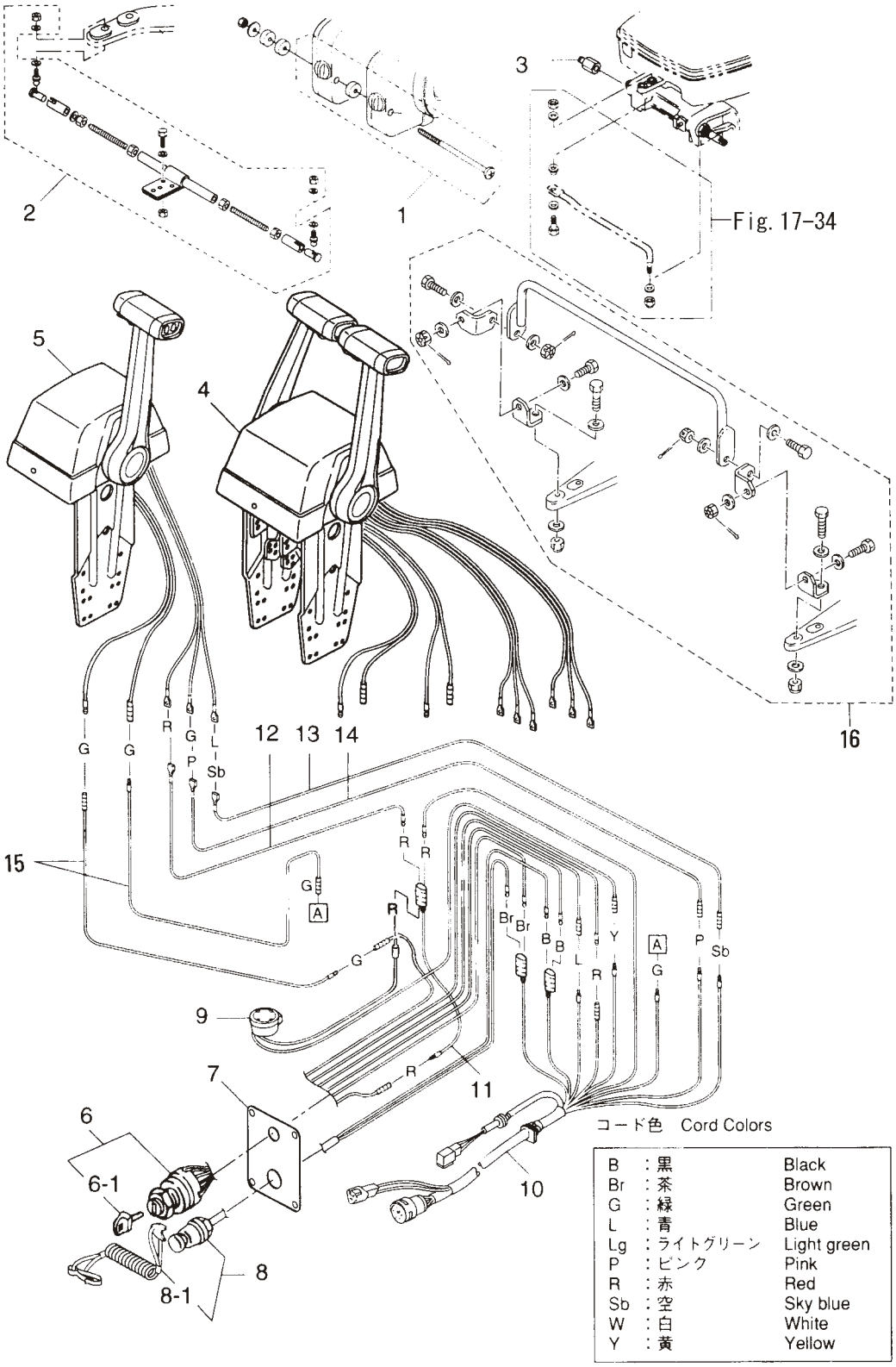

見出番号 Ref. No.	部品番号 Part No.	部　品　名 Description	個数 Q'ty D 90 B	個数 Q'ty D 70 B	備　考 Remarks
24-1	3A3-81301-0	ﾂｲﾝﾘﾓｰﾄｺﾝﾄﾛｰﾙﾎﾞｯｸｽｷｯﾄ Twin Remote Control Box Kit	1	1	
24-2	3B7-84900-1	ﾀｲﾊﾞｰｷｯﾄ B Tie-Bar Kit "B"	1	1	
24-3	353-84904-0	ﾄﾞﾗｯｸﾘﾝｸｽﾍﾟｰｻ Drag Link Spacer	1	1	
24-4	3T5Q84520-1	ｺﾝﾄﾛｰﾙﾎﾞｯｸｽ （ RC6GT ） Control Box （ RC6GT ）	1	1	ﾂｲﾝ 用 for Twin N.A.F.N
24-5	3T5Q84480-1	ｺﾝﾄﾛｰﾙﾎﾞｯｸｽ （ RC6G ） Control Box （ RC6G ）	1	1	ｼﾝｸﾞﾙ 用 for Single N.A.F.N
24-6	353-76020-3	ﾒｲﾝｽｲｯﾁ Main Switch	(2)1	(2)1	UNIQUE
24-6-1	3F3-76217-0	ﾒｲﾝｽｲｯﾁｷｰ (No.301) ＊ Main Switch Key (No.301)	(2)1	(2)1	UNIQUE
	3F3-76218-0	ﾒｲﾝｽｲｯﾁｷｰ (No.302) ＊ Main Switch Key (No.302)	(2)1	(2)1	UNIQUE
	3F3-76219-0	ﾒｲﾝｽｲｯﾁｷｰ (No.303) ＊ Main Switch Key (No.303)	(2)1	(2)1	UNIQUE
24-7	3T5-76201-0	ﾒｲﾝｽｲｯﾁﾊﾟﾈﾙ Main Switch Panel	(2)1	(2)1	
24-8	3A3-06830-0	ｽﾄｯﾌﾟｽｲｯﾁ Stop Switch	(2)1	(2)1	( ) 内の数は､ﾂｲﾝ用の 使用個数です。 ( ) is Using Number for Twin Engines.
24-8-1	353-06821-0	ｽﾄｯﾌﾟｽｲｯﾁﾛｯｸ (ﾛｰﾌﾟ付) ＊ Stop Switch Lanyard	(2)1	(2)1	
24-9	3C8-76171-0	ｵｰﾊﾞｰﾋｰﾄﾌﾞｻﾞｰ Over-Heat Buzzer	(2)1	(2)1	
24-10	3T5-76115-0	ｺｰﾄﾞｱｯｼﾞ B Cord Ass'y "B"	(2)1	(2)1	L=6200
24-11	353-72546-0	ｱｼｽﾄｺｰﾄﾞ (ﾚｯﾄﾞ) Assist Cord (Red)	(2)1	(2)1	
24-12	3C7-84475-0	PTT ｽｲｯﾁｺｰﾄﾞ (ﾚｯﾄﾞ) PTT Switch Cord (Red)	(2)1	(2)1	
24-13	3C7-84476-0	PTT ｽｲｯﾁｺｰﾄﾞ (ｽｶｲﾌﾞﾙｰ) PTT Switch Cord (Sky Blue)	(2)1	(2)1	
24-14	3C7-84477-0	PTT ｽｲｯﾁｺｰﾄﾞ (ﾋﾟﾝｸ) PTT Switch Cord (Pink)	(2)1	(2)1	
24-15	3C7-84471-1	ﾆｭﾄﾗﾙｽｲｯﾁｺｰﾄﾞ (ｸﾞﾘｰﾝ) Neutral Switch Cord (Green)	(4)2	(4)2	
24-16	3C7-84900-0	ﾀｲﾊﾞｰｷｯﾄ E Tie-Bar Kit "E"	1	1	

オプショナルパーツ (3)
Fig.25 OPTIONAL PARTS (3)

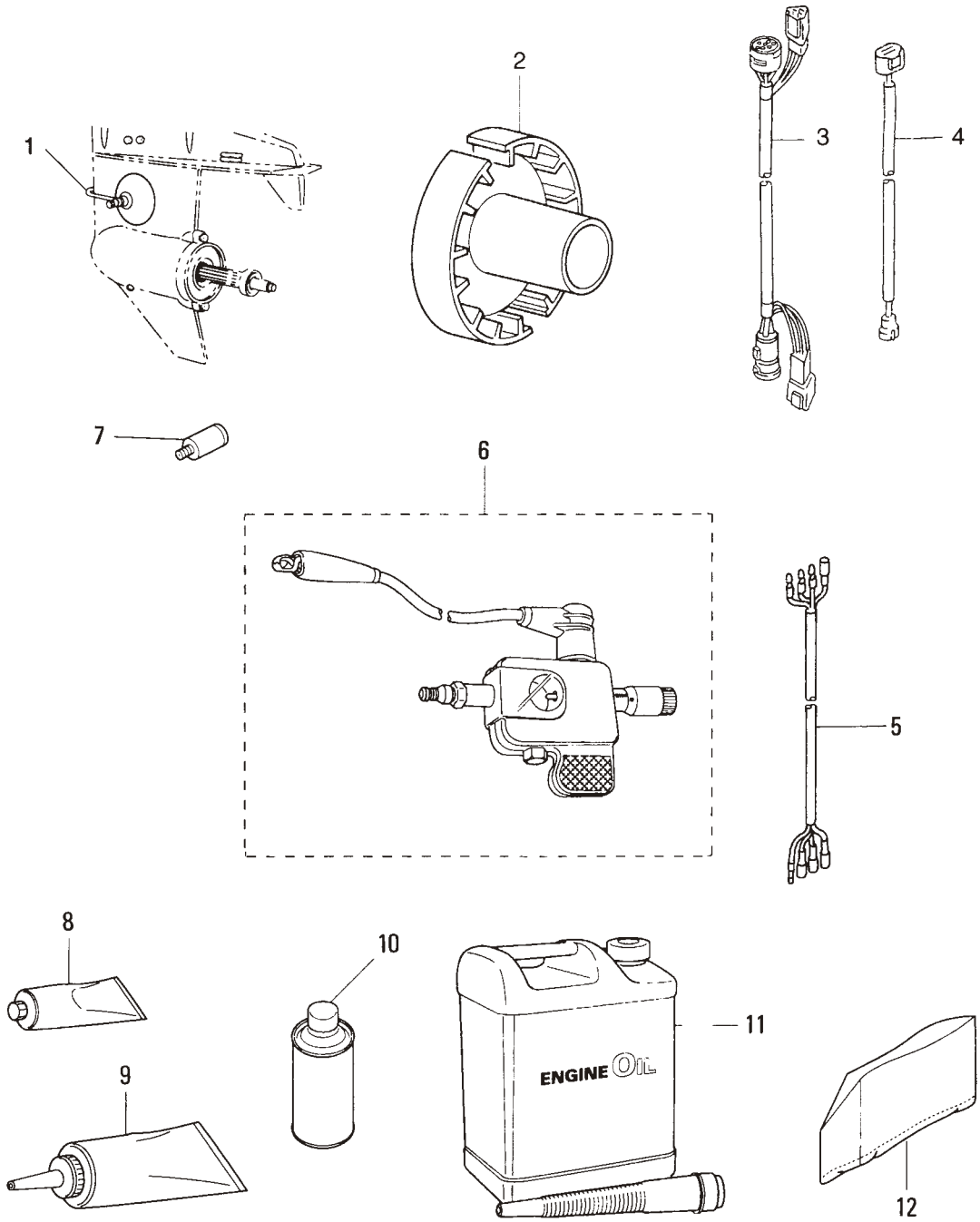

見出番号 Ref. No.	部品番号 Part No.	部　品　名 Description	個数 Q'ty D 90 B	個数 Q'ty D 70 B	備　考 Remarks
25-1	353-72406-0	ﾄﾞﾗｲﾌﾞｸﾘｰﾅ Drive Cleaner	1	1	
25-2	3B7-64111-0	ﾃｽﾄﾌﾟﾛﾍﾟﾗ Test Propeller	1	1	
25-3	3T5-76114-0	11P ｴｸｽﾃﾝｼｮﾝｺｰﾄﾞ 11P Extension Cord	1	1	L=2000
25-4	3T5-76112-0	2P ｴｸｽﾃﾝｼｮﾝｺｰﾄﾞ 2P Extension Cord	1	1	L=2000
25-5	3A3-72573-0	ﾄﾘﾑﾒｰﾀｴｸｽﾃﾝｼｮﾝｺｰﾄﾞ Trim Meter Extension Cord	1	1	L=2000
25-6	3F3-72540-0	ｽﾊﾟｰｸﾃｽﾀ Spark Tester	1	1	
25-7	3B7-60007-0	ﾌﾗｯｼﾝｸﾞｱﾀｯﾁﾒﾝﾄ Flushing Attachment	1	1	
25-8	332-72309-0	ｸﾞﾘｽ (250g) Grease (250g)	1	1	24 ﾁｭｰﾌﾞ/ｹｰｽ 24 tubes/case N.A.F.N
25-9	332-72306-0	ｷﾞﾔｵｲﾙ (500ml) Gear Oil (500ml)	1	1	30 ﾁｭｰﾌﾞ/ｹｰｽ 30 tubes/case N.A.F.N
25-10	3AC-72326-0	ﾀｯﾁｱｯﾌﾟﾍﾟｲﾝﾄ (ｱｸｱﾏﾘﾝﾌﾞﾙｰ) Touch-up Paint (Aquamarine Blue)	1	1	N.A.F.N
25-11	3Y9-72304-0	MD ﾌﾟﾗﾁﾅ (4.0 L) MD Platinum (4.0 liter)	1	1	Engine Oil N.A.F.N
25-12	3C7-72316-0	ﾋﾞﾆｰﾙﾓｰﾀｶﾊﾞｰ (4L) Vinyl Motor Cover (4L)	1	1	UNIQUE

アッセンブリ・キット
Fig.26 ASSEMBLY・KIT

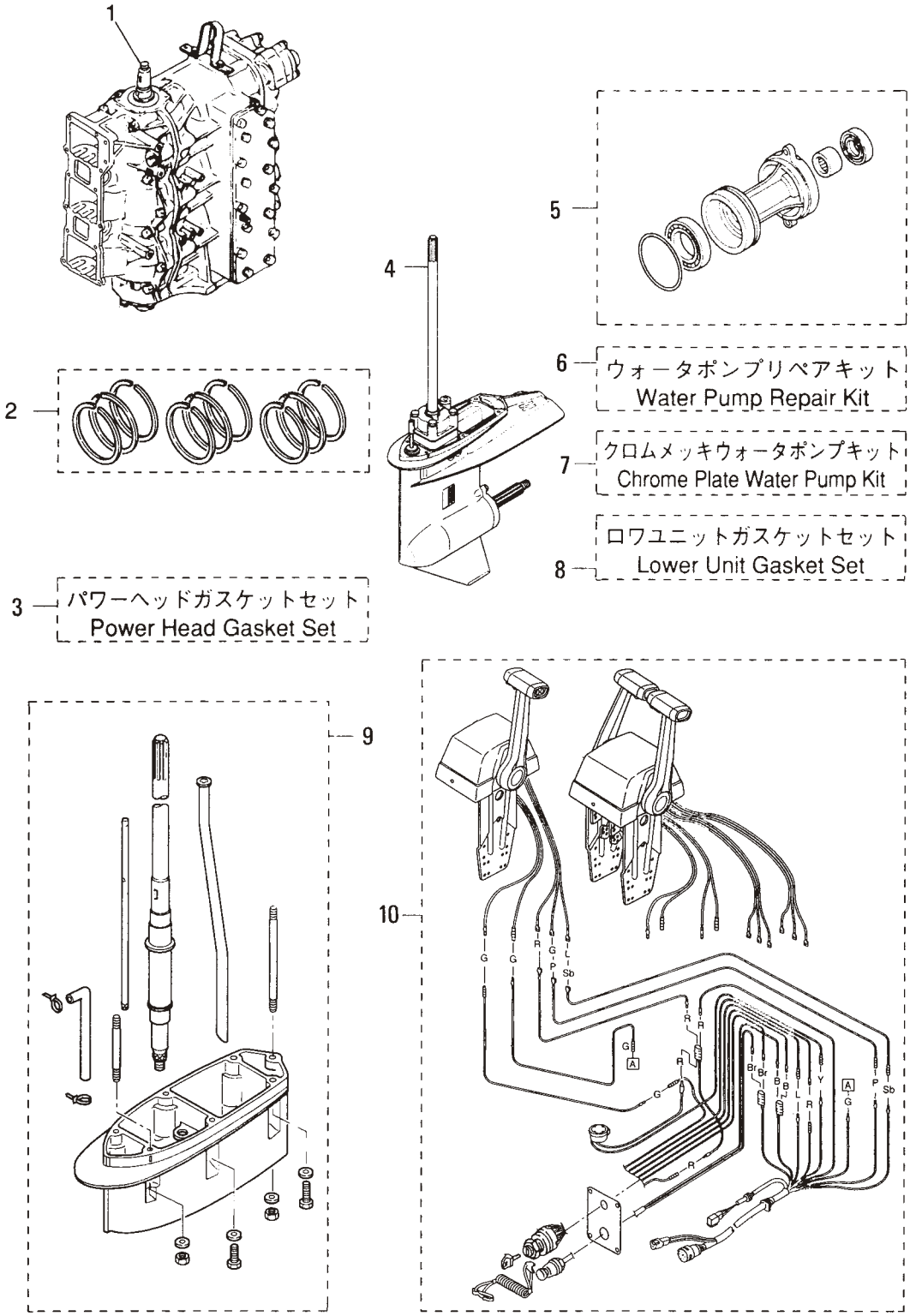

見出番号 Ref. No.	部品番号 Part No.	部　品　名 Description	個数 Q'ty D 90 B	個数 Q'ty D 70 B	備　考 Remarks
26-1	3Y9B87110-2	ｴﾝｼﾞﾝｼｮｰﾄﾌﾞﾛｯｸ Engine Short Block	1	1	70B # 70242～ 90B # 00766～
26-2	3B7-87123-1	ﾋﾟｽﾄﾝﾘﾝｸﾞｾｯﾄ (STD) Piston Ring Set (STD)	1 set	1 set	
	3B7-00011-0	ﾋﾟｽﾄﾝﾘﾝｸﾞ 1st (STD) ＊ Piston Ring 1st (STD)	3	3	
	3B7-00012-0	ﾋﾟｽﾄﾝﾘﾝｸﾞ 2nd (STD) ＊ Piston Ring 2nd (STD)	6	6	
26-2-1	3B7-87124-1	ﾋﾟｽﾄﾝﾘﾝｸﾞｾｯﾄ (0.5mm O/S) Piston Ring Set (0.5mm O/S)	1 set	1 set	
	3B7-00014-0	ﾋﾟｽﾄﾝﾘﾝｸﾞ 1st (0.5mm O/S) ＊ Piston Ring 1st (0.5mm O/S)	3	3	
	3B7-00015-0	ﾋﾟｽﾄﾝﾘﾝｸﾞ 2nd (0.5mm O/S) ＊ Piston Ring 2nd (0.5mm O/S)	6	6	
26-3	3T9-87121-0	ﾊﾟﾜｰﾍｯﾄﾞｶﾞｽｹｯﾄｾｯﾄ Power Head Gasket Set	1 set	1 set	
	3T9-01005-0	ｼﾘﾝﾀﾞﾍｯﾄﾞｶﾞｽｹｯﾄ ＊ Cylinder Head Gasket	1	1	
	3T9-01024-0	ｼﾘﾝﾀﾞﾍｯﾄﾞｶﾊﾞｰｶﾞｽｹｯﾄ ＊ Cylinder Head Cover Gasket	1	1	
	3T9-01032-0	ｻｰﾓｽﾀｯﾄｷｬｯﾌﾟｶﾞｽｹｯﾄ ＊ Thermostat Cap Gasket	1	1	
	3B7-02305-0	ｴｷｿﾞｰｽﾄｶﾊﾞｰｶﾞｽｹｯﾄ ＊ Exhaust Cover Gasket	2	2	
	171-00053-0	O ﾘﾝｸﾞ、2-74.5 ＊ O-Ring, 2-74.5	1	1	Crank Case Lower Head
	3C7-01215-0	ｵｲﾙｼｰﾙ、19.6-35-10 ＊ Oil Seal, 19.6-35-10	1	1	Drive Shaft
	3T9-00121-0	ｵｲﾙｼｰﾙ、35-58-9 ＊ Oil Seal, 35-58-9	1	1	Crankshaft Lower
	3T9-02104-0	ｲﾝﾃｰｸﾏﾆﾎｰﾙﾄﾞｶﾞｽｹｯﾄ ＊ Intake Manifold Gasket	1	1	
	3T9-02242-0	ｴｱﾁｬﾝﾊﾞｶﾞｽｹｯﾄ ＊ Air Chamber Gasket	1	1	
	3T9-02245-0	ｴｱﾁｬﾝﾊﾞｶﾊﾞｰｶﾞｽｹｯﾄ ＊ Air Chamber Cover Gasket	1	1	
	346-04901-1	ﾌｭｴﾙﾎﾟﾝﾌﾟｶﾞｽｹｯﾄ ＊ Fuel Pump Gasket	1	1	
	3B7-02235-0	O ﾘﾝｸﾞ A ＊ O-Ring “A”	2	2	Fuel Filter Oil Filter
	3B7-02236-0	O ﾘﾝｸﾞ B ＊ O-Ring “B”	2	2	Fuel Filter Oil Filter
	3B7-09002-0	O ﾘﾝｸﾞ、1.6-19.2 ＊ O-Ring, 1.6-19.2	1	1	Don't Use For 70A2/90A2 & 70B/90B
	3C8-71016-0	ｶﾞｽｹｯﾄ、36-52-2 ＊ Gasket, 36-52-2	1	1	
	3B7-01303-1	ｴﾝｼﾞﾝﾍﾞｰｽｶﾞｽｹｯﾄ ＊ Engine Basement Gasket	1	1	
	353-00108-0	O ﾘﾝｸﾞ、2.4-44.7 ＊ O-Ring, 2.4-44.7	1	1	Crankshaft Upper

見出番号 Ref. No.	部品番号 Part No.	部　品　名 Description	個数 Q'ty D 90 B	個数 Q'ty D 70 B	備　考 Remarks
26-4	3Y9Q87302-2	ﾛﾜﾕﾆｯﾄｱｯｼ L Lower Unit Ass'y "L"	1	-	
	3Y7Q87302-2	ﾛﾜﾕﾆｯﾄｱｯｼ L Lower Unit Ass'y "L"	-	1	
	3Y9Q87304-2	ﾛﾜﾕﾆｯﾄｱｯｼ UL Lower Unit Ass'y "UL"	1	-	
	3Y7Q87304-2	ﾛﾜﾕﾆｯﾄｱｯｼ UL Lower Unit Ass'y "UL"	-	1	
26-5	3B7Q87323-1	ﾌﾟﾛﾍﾟﾗｼｬﾌﾄﾊｳｼﾞﾝｸﾞｱｯｼ Propeller Shaft Housing Ass'y	1	1	
26-6	3C7-87322-1	ｳｫｰﾀﾎﾟﾝﾌﾟﾘﾍﾟｱｷｯﾄ Water Pump Repair Kit	1 set	1 set	
	3C7-65021-1	＊ ｳｫｰﾀﾎﾟﾝﾌﾟｲﾝﾍﾟﾗ Water Pump Impeller	1	1	
	3B7-65022-0	＊ ｳｫｰﾀﾎﾟﾝﾌﾟｲﾝﾍﾟﾗｷｰ Water Pump Impeller Key	1	1	
	3C7-65011-0	＊ ﾎﾟﾝﾌﾟｹｰｽﾗｲﾅ Pump Case Liner	1	1	
	3C7-65018-0	＊ ﾎﾟﾝﾌﾟｹｰｽｼｰﾙ Pump Case Seal	1	1	
	3C7-65025-0	＊ ｳｫｰﾀﾎﾟﾝﾌﾟｶﾞｲﾄﾞﾌﾟﾚｰﾄ Water Pump Guide Plate	1	1	
	3C7-65029-0	＊ ｶﾞｲﾄﾞﾌﾟﾚｰﾄｶﾞｽｹｯﾄ Guide Plate Gasket	1	1	
	916113-0885	＊ ﾎﾞﾙﾄ Bolt	4	4	
	940113-0800	＊ ﾜｯｼｬ Washer	4	4	
26-7	3C7-65231-0	ｳｫｰﾀﾎﾟﾝﾌﾟｷｯﾄ (ｸﾛｰﾑﾒｯｷ) Water Pump Kit (Chrome Plated)	1 set	1 set	
	3C7-65021-1	＊ ｳｫｰﾀﾎﾟﾝﾌﾟｲﾝﾍﾟﾗ Water Pump Impeller	1	1	
	3C7-65238-0	＊ ﾎﾟﾝﾌﾟｹｰｽﾗｲﾅ (ｸﾛｰﾑﾒｯｷ) Pump Case Liner (Chrome Plated)	1	1	
	3C7-65018-0	＊ ﾎﾟﾝﾌﾟｹｰｽｼｰﾙ Pump Case Seal	1	1	
	3C7-65239-0	＊ ｶﾞｲﾄﾞﾌﾟﾚｰﾄ (ｸﾛｰﾑﾒｯｷ) Guide Plate (Chrome Plated)	1	1	
	3C7-65029-0	＊ ｶﾞｲﾄﾞﾌﾟﾚｰﾄｶﾞｽｹｯﾄ Guide Plate Gasket	1	1	
26-8	3T9-87321-0	ﾛﾜﾕﾆｯﾄｶﾞｽｹｯﾄｾｯﾄ Lower Unit Gasket Set	1 set	1 set	
	3B7-61012-0	＊ ﾄﾞﾗｲﾌﾞｼｬﾌﾄﾊｳｼﾞﾝｸﾞｶﾞｽｹｯﾄ Drive Shaft Housing Gasket	1	1	
	3B7-02312-1	＊ ｴｷｿﾞｰｽﾄﾊﾟｲﾌﾟｶﾞｽｹｯﾄ Exhaust Pipe Gasket	1	1	
	3B7-61181-1	＊ ｴｷｿﾞｰｽﾄﾊｳｼﾞﾝｸﾞｶﾞｽｹｯﾄ Exhaust Housing Gasket	1	1	
	332-60006-0	＊ ｶﾞｽｹｯﾄ、8.1-15-1 Gasket, 8.1-15-1	2	2	
	3B7-60016-0	＊ ｶﾞｽｹｯﾄ、10.1-15-1 Gasket, 10.1-15-1	1	1	

見出番号 Ref. No.	部品番号 Part No.	部　品　名 Description	個数 Q'ty D 90 B	D 70 B	備　考 Remarks
26-8	3C7-65018-0	ﾎﾟﾝﾌﾟｹｰｽｼｰﾙ ＊ Pump Case Seal	1	1	
	3C7-65029-0	ｶﾞｲﾄﾞﾌﾟﾚｰﾄｶﾞｽｹｯﾄ ＊ Guide Plate Gasket	1	1	
	3C7-60223-1	ｵｲﾙｼｰﾙ、22-42-7 ＊ Oil Seal, 22-42-7	2	2	Drive Shaft
	346-64084-0	ｼﾑ、35-41.9-0.5 ＊ Shim, 35-41.9-0.5	1	1	Drive Shaft Oil Seal
	3B7-65015-0	O ﾘﾝｸﾞ、3.1-54.4 ＊ O-Ring, 3.1-54.4	1	1	Pump Case Lower
	345-66021-0	O ﾘﾝｸﾞ、1.9-6.8 ＊ O-Ring, 1.9-6.8	2	2	Cam Rod
	3B7-66023-0	O ﾘﾝｸﾞ、3.5-27.7 ＊ O-Ring, 3.5-27.7	1	1	Cam Rod Bushing
	3B7-60103-0	O ﾘﾝｸﾞ、3.1-94.4 ＊ O-Ring, 3.1-94.4	1	1	Propeller Shaft
	3B7-60111-0	ｵｲﾙｼｰﾙ、30-50-12 ＊ Oil Seal, 30-50-12	1	1	Propeller Shaft
	3B7-60219-0	ﾄﾘﾑﾀﾌﾞｶﾞｽｹｯﾄ ＊ Trim Tab Gasket	1	1	
26-9	3C7Q87314-0	ｴｸｽﾃﾝｼｮﾝﾊｳｼﾞﾝｸﾞｷｯﾄ UL Extension Housing Kit “UL”	1 set	1 set	70B # 70376～ 90B # 00970～
	3B7Q61110-0	ｴｸｽﾃﾝｼｮﾝﾊｳｼﾞﾝｸﾞ UL ＊ Extension Housing “UL”	1	1	
	916189-0835	ﾎﾞﾙﾄ、8-35 ＊ Bolt, 8-35	3	3	
	915313-0825	ｽﾀｯﾄﾞﾎﾞﾙﾄ ＊ Stud Bolt	1	1	
	930113-0800	ﾅｯﾄ ＊ Nut	1	1	
	940113-0800	ﾜｯｼｬ ＊ Washer	4	4	
	3B7-60001-2	ﾎﾞﾙﾄ、10-40 ＊ Bolt, 10-40	2	2	
	3B7-61112-0	ｽﾀｯﾄﾞﾎﾞﾙﾄ、10-165 ＊ Stud Bolt, 10-165	1	1	
	940213-1000	ﾜｯｼｬ ＊ Washer	3	3	
	3B7-61114-0	ﾅｯﾄ、10P-1.25 ＊ Nut, 10-P1.25	1	1	
	3C7-64303-2	ﾄﾞﾗｲﾌﾞｼｬﾌﾄ UL ＊ Drive Shaft “UL”	1	1	
	3B7-66014-1	ｶﾑﾛｯﾄﾞ UL ＊ Cam Rod UL	1	1	
	951403-3516	ｽﾌﾟﾘﾝｸﾞﾋﾟﾝ、3.5-16 ＊ Spring Pin, 3.5-16	2	2	
	951403-3510	ｽﾌﾟﾘﾝｸﾞﾋﾟﾝ、3.5-10 ＊ Spring Pin, 3.5-10	1	1	
	98AL-4-0920	ｽﾋﾟﾄﾞﾒｰﾀﾊﾟｲﾌﾟ UL ＊ Speedometer Pipe “UL”	1	1	
	3C7-65120-0	ｳｫｰﾀﾊﾟｲﾌﾟ UL ＊ Water Pipe “UL”	1	1	
26-10	3T5Q84490-1	ﾄｯﾌﾟﾏｳﾝﾄﾘﾓｺﾝｷｯﾄ Top Mount Control Kit	1 set	1 set	ｼﾝｸﾞﾙ 用 for Single N.A.F.N
	3T5Q84540-1	ﾄｯﾌﾟﾏｳﾝﾄﾘﾓｺﾝｷｯﾄ、ﾂｲﾝ Top Mount Control Kit Twin	1 set	1 set	ﾂｲﾝ 用 for Twin N.A.F.N

TOHATSU

トーハツ船外機
パーツ　リスト

PARTS LIST

MD 40 50 70 90

TOHATSU CORPORATION
Address : 5-4,3-chome,Azusawa,Itabashi-ku,
TOKYO,174-0051 JAPAN
Phone : TOKYO (03)3966-3117
FAX : TOKYO (03)3966-2951
www.tohatsu.co.jp

本　　社	〒174-0051	東京都板橋区小豆沢3-5-4	03（3966）3116
マリン九州	〒816-0092	福岡市博多区東那珂2-10-55	092（411）8770
マリン関西	〒530-0043	大阪市北区天満 1-8-27	06（6358）2971
マリン中部	〒440-0069	愛知県豊橋市御園町7-12	0532（54）5551
マリン関東	〒174-0051	東京都板橋区小豆沢3-5-4	03（3966）2222
マリン東北	〒981-1106	仙台市太白区柳生2-23-1	022（306）9131
マリン北海道	〒060-0031	札幌市中央区北一条東11丁目22-41	011（241）8301

002-21049-3
0608-NICS2000